Internal Use Only

# MOBILE PHONE
# SERVICE MANUAL

CAUTION
BEFORE SERVICING THE UNIT, READ THE “SAFETY PRECAUTIONS” IN THIS MANUAL

## MODEL : LM-X120HM

Date: June 2019 / Issue 1.0

# Table Of Contents


**1. INTRODUCTION..... 3**
1.1 Purpose
1.2 Regulatory Information

**2. PERFORMANCE..... 4**
2.1 Band Specification
2.2 HW Features
2.3 RSSI Display
2.4 Current consumption
2.5 Battery bar
2.6 SW Specification

**3. TROUBLE SHOOTING.....17**
3.1 Checking XO Block
3.2 Checking Transceiver DC Power Supply Circuit Block
3.3 Checking DC-DC Block
3.4 ASM Block
3.5 GSM, WCDMA, LTE PART
3.5.1 GSM RF PART
3.5.2 WCDMA PART
3.5.3 LTE PART
3.6 Power
3.7 Charger
3.8 Audio Block
3.8.1 Audio receiver
3.8.2 Audio speaker
3.8.3 Audio Main Mic
3.8.4 Audio sub Mic
3.8.5 Audio Ear mic jack
3.8.6 FM Radio
3.9 Checking LCD Block
3.10 Checking Touch Block
3.11 Checking Compass sensor Block(NO)
3.12 Checking accel & gyro Block
3.13 Checking proximity Block
3.14 Checking main camera Block
3.15 Checking front camera Block
3.16 Checking Motor Block
3.17 Checking BT/WIFI/GPS Block

**4. BLOCK DIAGRAM..... 58**

**5. CIRCUIT DIAGRAM..... 70**

**6. BGA PIN MAP..... 71**

**7. PCB LAYOUT..... 72**

**8. MEMORY VARIATION..... 76**

**9. HIDDEN MENU..... 77**

**10. DOWNLOAD..... 80**

**11. CALIBRATION..... 81**

**12. DISASSEMBLE GUIDE..... 82**

**13. EXPLODED VIEW..... 89**

**14. REPLACEMENT PART LIST..... 90**





**Copyright © 2019 LG Electronics. Inc. All right reserved.**
**Only training and service purposes**

## 1.1 Purpose

This manual provides the information necessary to repair, calibration, description and download the features of this model.

## 1.2 Regulatory Information

**A. Security**

This material is prohibited to share and release to unauthorized person, in accordance with the regulations, LG Electronics, Civil / criminal responsibility in accordance with the relevant provisions violate.

**B. Precautions for repair**

- In case of Disassembly or Assembly to repair product, be careful of a product failure caused by RF signals and Static electricity.
- When using Magnetic tool for the Phone's SVC repair, you should check affect the Electric parts according to effect of Magnet.
- When fastening the screw, be careful not to damage the head of screw and even product.

**C. Attention**

**Boards, which contain Electrostatic Sensitive Device (ESD), are indicated by the sign.**

**Following information is ESD handling:**

- Service personal should ground themselves by using a wrist, strap when exchange system board.
- When repair are made to a system board, they should spread the floor with anti-static mat which is also grounded.
- Use a suitable, grounded soldering iron.
- Keep sensitive parts in these protective packages until these are used.
- When returning system board or parts like EEPROM to the Factory, use the protective package as described.



Copyright © 2019 LG Electronics. Inc. All right reserved.
Only training and service purposes

## 2.1 Band Specification

| Support Band | TX Freq (MHz) | RX Freq (MHz) |
|---|---|---|
| WCDMA(FDD1) | 1922 – 1978 | 2112 – 2167 |
| WCDMA(FDD2) | 1852 – 1908 | 1932 – 1988 |
| WCDMA(FDD4) | 1712 – 1753 | 2112-2153 |
| WCDMA(FDD5) | 826 – 847 | 871 – 892 |
| WCDMA(FDD8) | 882 – 913 | 927 – 958 |
| EGSM | 880 – 915 | 925 – 960 |
| GSM850 | 824 – 849 | 869 – 894 |
| DCS1800 | 1710 – 1785 | 1805 – 1880 |
| PCS1900 | 1850 – 1910 | 1930 – 1990 |
| LTE1 | 1920 – 1980 | 2110 – 2170 |
| LTE2 | 1850 – 1910 | 1930 – 1990 |
| LTE3 | 1710 – 1785 | 1805 – 1880 |
| LTE4 | 1710 – 1755 | 2110 – 2155 |
| LTE5 | 1920 – 1980 | 2110 – 2170 |
| LTE7 | 2500 – 2570 | 2620 – 2690 |
| LTE8 | 880 – 915 | 925 – 960 |
| LTE17 | 704 – 716 | 734 – 746 |
| LTE28 | 703 – 748 | 758 – 2620 |
| LTE66 | 1710 – 1780 | 2110 – 2180 |



Copyright © 2019 LG Electronics. Inc. All right reserved.
Only training and service purposes

## 2.2 HW Features

| List | Type / Spec. | |
|---|---|---|
| 1. Phone Type | DOP Type | |
| 2. Size | 148.6mm x 71.9mm x 8.3mm | |
| 3. Weight | 145 g ( with Battery ) | |
| 4. Battery | 3,000mAh(Typ) (Li-Ion), 2,890mAh(Min.) | |
| 5.Chipset | MT6739WW (2.0GHz Ouad-core + 1.5GHz Quad-core) | |
| 6. Memory | 16GB(EMMC) + 1GB(LPDDR3) External Memory(SD Card) : Up to 2TB | |
| 7. LCD | Size | 5.45 inch |
| | Display Type | TFT |
| | Color | 16.7M colors |
| | Resolution | 480(V) X 960(H) |
| 8. Touch | Type | 5.45 inch Capacitive type |
| 9. Main Camera (8M) | Type | CMOS image sensor |
| | Resolution | 3264(H) X 2448(V) pixels. |
| | Image Scaling Down | 4:3(8.0MP – 3264x2448) |
| | Format | **Image :** JPG, **Video :** MP4 |



Copyright © 2019 LG Electronics. Inc. All right reserved.
Only training and service purposes

## 2.2 HW Features

| | | |
|---|---|---|
| 10. Audio | Receiver | 12 X 06 X 2.0T Receiver |
| | Speaker | 15 X 11 X 2.5T Speaker |
| | Format | MP3, AAC, MIDI, EAAC+, OGG, AMR |
| 11. Bluetooth | Standard | Bluetooth 4.2 |
| | Effective Distance | 10M |
| | Distance | 0 m ~ 10 m (depend on environment) |
| 12. WLAN | Standard | IEEE 802.11 b/g/n |
| | Throughput | Max 112Mbps |
| | Depend on environment | 0 ~ 15m (depend on environment) |
| 13. GPS | type | A-GPS, Glonass |



Copyright ⓒ 2019 LG Electronics. Inc. All right reserved.
Only training and service purposes

## 2.3 RSSI Display

| RSSI BAR | GSM RSSI | WCDMA RSSI | LTE RSSI | Comment |
|---|---|---|---|---|
| BAR 4->3 | - 85dBm± 5dB | - 72dBm± 3dB | -92dBm ± 6dB | 1. Call Connected & CPIPH Level=-3.3<br>2. LTE:RSRP |
| BAR 3->2 | - 95dBm± 4dB | - 80dBm± 5dB | -102dBm ± 5dB | |
| BAR 2->1 | - 102dBm± 2dB | - 91dBm± 5dB | -113dBm ± 5dB | |
| BAR 1->0 | - 106dBm± 2dB | - 101dBm± 4dB | -121dBm ± 4dB | |

## 2.4 Current consumption

| | Stand by | | Voice Call (LTE Data connection) | Measurement Condition |
|---|---|---|---|---|
| | Bluetooth Off | Bluetooth Connected | | |
| WCDMA Only | 12 mA under (DRX=7) | 15 mA under (DRX=7) | 500 mA under (Tx=10dBm) | LCD off |
| GSM Only | 12 mA under (PP=5) | 15 mA under (PP=5) | 500 mA under (Lvl=5) | LCD off |
| LTE | 12 mA under (LTE 2.56S) | 15 mA under (LTE 2.56s) | 500 mA under (@TX 10 dBm) | LCD off |



Copyright ⓒ 2019 LG Electronics. Inc. All right reserved.
Only training and service purposes

## 2.5 Battery bar

| Battery Bar icon | Specification(%) |
|---|---|
| Level 20 | 98 ~ 100 |
| Level 19 | 93 ~ 97 |
| Level 18 | 88 ~ 92 |
| Level 17 | 83 ~ 87 |
| Level 16 | 78 ~ 82 |
| Level 15 | 73 ~ 77 |
| Level 14 | 68 ~ 72 |
| Level 13 | 63 ~ 67 |
| Level 12 | 58 ~ 62 |
| Level 11 | 53 ~ 57 |
| Level 10 | 48 ~ 52 |
| Level 9 | 43 ~ 47 |
| Level 8 | 38 ~ 42 |
| Level 7 | 33 ~ 37 |
| Level 6 | 28 ~ 32 |
| Level 5 | 23 ~ 27 |
| Level 4 | 16 ~ 22 |
| Level 3 | 13 ~ 15 |
| Level 2 | 8 ~ 12 |
| Level 1 | 3 ~ 7 |
| Level 0 | 0 ~ 2 |
| Low Battery Pop-up | 16% →15% : One Time popup (No call)<br>There is no pop-up until 5% if you delete pop-up. |
| Critical Low battery pop-up | 6% → 5% : One Time popup (No call)<br>There is no pop-up until 3% if you delete pop-up. |
| Power off | Under 1% |



Copyright ⓒ 2019 LG Electronics. Inc. All right reserved.
Only training and service purposes

## 2.6 SW Specification

| Function | Detail Item | O / X | Specification | Etc. |
|---|---|---|---|---|
| OS | OS | O | Android P Go | |
| Data | Circuit | X | | |
| | Packet | O | | |
| Connectivity | Infrared (IrDA) | X | | |
| | Bluetooth | O | Ver. 5.0 | |
| | Wi-Fi | O | 802.11 b/g/n | |
| | USB | O | Ver. 2.0 | |
| | USB Mass storage | X | MTP support | |
| | RS232 | X | | |
| | DLNA1.5 | X | | |
| Voice Function | Voice Recording | O | app downloading | |
| | Voice Command | X | | |
| | | X | | |
| | | X | | |
| | | X | | |
| | Answering machine | X | | |
| Memory | User Memory | O | Total | 16GB |
| | | O | Total User Memory | 12GB (w/o MicroSD) |
| | | X | MMS | |
| | | O | Pictures (Still Image & Moving Image) | |
| | | O | MP3 (Music Contents) | |
| | | X | Java Contents | |
| | | X | Wallpaper | |
| | | X | Ringtone | |
| | | O | external memory (microSD) | up to 32TB |
| Camera (Still Capture) | Memory | O | MicroSD | |
| | Camera Module | O | 8M AF | |
| | Auto Focus | O | | |
| | Digital Zoom | O | 4x | |
| | Capture Resolution | O | rear capture :<br>3264x2448, 3328x1872,<br>3264x1632, 2560x1920,<br>2560x1440, 2560x1280,<br>2448x2448, 1840x1840<br><br>front capture :<br>2560x1920, 2560x1440,<br>2560x1280, 1920x1920, | |
| | Continuous Shot | X | | |
| | Quality | X | | |
| | Preview Image | O | | |
| | TV-Out | X | | |
| | Flash | O | | |



Copyright ⓒ 2019 LG Electronics. Inc. All right reserved.
Only training and service purposes

## 2.6 SW Specification

| | | | | |
|---|---|---|---|---|
| Camera (Movie Capture) | Movie Resolution | O | Rear<br>1920x1080, 1280x720<br>Front<br>1920x1080, 1280x720 | |
| | Filter | X | | |
| | Quality | X | | |
| | MPEG Visual Bit Rate | X | | Default code H.264<br>And video Bit rate is 17Mbps<br>We can support MPEG-4, but the bit rate is depend on Application setting |
| | Audio Encode | O | AAC, , AMR-NB | |
| | Audio Decode | O | AMR | |
| | Movie Recode | O | Recode, Stop, Pause, Resume | |
| | Movie Playback | O | Play, Stop, Pause | |
| | Stream Format (Mux) | O | mp4, 3gp | mp4 – normal<br>3gp – mms |
| | Stream Format (Demux) | O | mp4, 3gp | mp4 – normal<br>3gp – mms |
| | Recoding Time | O | Real Time Recoding | |
| | TV-Out | X | | |
| Audio<br>Multimedia | Voice Codec | O | AMR/ 3gpp | |
| | AAC /AAC+/ EAAC+ | O | | |
| | MP3, WAV | O | | |
| | WMA | O | | |
| | Midi | O | ● Type 0 and 1 (.mid, .xmf, .mxmf)<br>● RTTTL/RTX (.rtttl, .rtx)<br>● OTA (.ota)<br>● iMelody (.imy) | |
| | Music ringtone | O | MP3, AAC, AAC+, eAAC+, AMR, OGG, FLAC, ALAC, PCM, WMA, OPUS | |
| | AMR-NB | O | | |
| | Music player skin | O | Music Player | |
| | FM Radio | O | | |
| | Speakerphone | O | | |



Copyright ⓒ 2019 LG Electronics. Inc. All right reserved.
Only training and service purposes

## 2.6 SW Specification

| | | | | |
|---|---|---|---|---|
| Multimedia | MPEG4/H.263 | O | MPEG4 - Decoding : 1080p/30fps/20Mbps<br>H.263 - Decoding : 704*576/30fps/15Mbps | |
| | H.264 | O | Decoding : 1080p/30fps/20Mbps | |
| | WMV | X | | |
| | Normal View | O | Moving Image Capture & Movie Contents | contents size |
| | Wide View | O | Full Screen mode | |
| | Custom DTV Zoom | X | | |
| Other Features | File Viewer | X | | Android App can be downloaded in Play Store |
| | Macromedia Flash Lite | X | Not Available | |
| | e-Book/e-Comic Book | X | *.doc, *.jpg, *.gif | E-book reader program is not included in ROM. But user can download in internet.. |
| | Flight Mode | O | | |
| Internet Browser | WAP<br>(Windows Mobile 6.0 IE Mobile ) | X | version 2.0 | |
| | | X | WML1.3 | |
| | | O | XHTML1.1 | |
| | | O | HTML4.01 | Partially support - HTML 5 |
| Java | MIDP | X | | |
| | J2ME support | X | | |
| | Game & Contents | X | | |
| | CLDC | X | | |
| Flash | Flash Game | X | | |
| Streaming Service | H.263+AAC/AMR-NB | O | H.263 - Decoding : 704*576/30fps/15Mbps | |
| | MPEG4+AAC/AMR-NB | O | MPEG4 - Decoding : 1080p/30fps/20Mbps | |
| | WMV9 | X | | |
| DRM | OMA DRM | O | Forward Lock | |
| | | X | Separate Delivery | |
| | | X | Combined Delivery - Count-only | |
| OTA | OTA | O | OTA 1.0 | |
| Display | RSSI | O | 6 level (Include No service) | |
| | Battery Level | O | with percentage | Yes |
| | RTC | O | | |
| | Multi Language | O | depending on build language. | |
| | Quick Access Mode | X | | |
| | PLMN/Service Indicator | O | | |
| | Dimming Clock | X | Battery power<br>15s, 30s, 1min, 2min, 5min 10min, 15min<br>External power<br>15s, 30s, 1min, 2min, 10min, 15min | Screen timeout supports |



Copyright ⓒ 2019 LG Electronics. Inc. All right reserved.
Only training and service purposes

## 2.6 SW Specification

| | | | | |
|---|---|---|---|---|
| Normal Features | Last Dialed Number | O | | |
| | Last Received Number | O | | |
| | Last Missed Number | O | | |
| | Scratch Pad Memory | X | | |
| Call Management Managemen | Call Waiting | O | | |
| | Call Swap | O | | |
| | Call Retrieve | O | | |
| | Auto Answer | O | | |
| | Automatic Redial | X | | |
| | Calling Line Identification | O | | |
| | Full Call divert | O | | |
| | Speed Dialing | O | | |
| | Last Number Redial | X | | |
| | Multiparty Call (Conference Call) | O | | |
| | Explicit Call Transfer | O | | |
| Network | Automatic Network Selection | O | | |
| | Manual Network Selection | O | | |
| | Network Service Status | O | | |
| DTMF | DTMF Signaling | O | | |
| | DTMF Enable & Disable | X | | |
| Audio | Key Tone Volume | O | 16 Level (Include Mute) | |
| | Ring Tone Volume | O | 16 Level (Include Mute) | |
| | Ring Tone Pattern | O | ogg | |
| | Ring Type Silent | O | Vibrator & Ring (Indicator) | |
| | Earpiece Volume | O | 16 Level (Include Mute) | |
| | Mute | O | | |
| Cell Broadcast | Read Cell Broadcast | O | | |
| | Cell Broadcast Categories | X | | |
| | Cell Broadcast Message Language | O | Supports filtering with language IDs (German,Italian,French, Spanish, Dutch,Swedish,Danish,Portuguese,Finnish,Norweggian, Greek,Turkish,Hungarian,Polish,Czech) | |



Copyright ⓒ 2019 LG Electronics. Inc. All right reserved.
Only training and service purposes

## 2.6 SW Specification

| | | | | |
|---|---|---|---|---|
| Phone Book | Entry | O | Name, Phone, Email, Groups, Postal address, Ringtone, Notification Sound, Phonetic name, Organization, IM, Notes,Nickname, Website, Event | |
| | Field | O | Phone(Mobile,Work,Home,Main, Work Fax,Home Fax,Pager, Other, Custom)<br>Email(Home,Work,Other,Custom)<br>Groups(Coworkers,Family,Friends)<br>Postal address(Home,Work,Other,Custom)<br>Organization(Company,Title)<br>IM(AIM,Windows Live,Yahoo,Skype,QQ,Hangouts,ICQ,Jabber,Custom)<br>Event(Birthday,Anniversary,Other, Custom) | |
| | Numeric Store and Recall | O | | |
| | Alphabetic Store | O | | |
| | Alphabetic Recall | X | | |
| | Scroll by alphabetic or numeric order | O | | |
| | Last Number Dialed | O | | |
| | Last Number Missed | O | | |
| | Last Number Received | O | | |
| | Copy & Move | X | Move not support | |
| | Fixed Dial Number | O | | |
| | Barred Dial Number | X | | |
| | Service Dial Number | X | It depends on SIM card | |
| | Email Entry | O | | |
| | Picture ID | O | Relating Photo caller ID | |
| | My Name card | O | Bluetooth transmission (OPP | |
| Call Cost | Last Call Timer | X | | |
| | Last Call Charge Units | X | | |
| | Total Call Timer | X | | |
| | Total Charge Units | X | | |
| | Visible, Audible Call Time/Cost Indication | X | | |
| Supp. Services | Call Forwarding | O | All Incoming Calls, | |
| | | O | No Reply | |



Copyright ⓒ 2019 LG Electronics. Inc. All right reserved.
Only training and service purposes

## 2.6 SW Specification

| | | | | |
|---|---|---|---|---|
| SIM | Plug In Type | O | | |
| | SIM Lock | O | | |
| | SIM Toolkit | O | | |
| | Prepaid SIM Operation | O | | |
| Short Messaging | Read Message | O | EMS Not Support | |
| | Write and Edit Message | O | | |
| | Send and Receive Message | O | | |
| | Reply to Message | O | | |
| | Forward Message | O | | |
| | Extract Number from Message | O | | |
| | Message Status | O | | |
| | Message Unread Indicator | O | | |
| | Settable Message Center Number, | O | | |
| | Reply Path and Validity | X | | |
| | Visible and Audible Message Receive Alertin g | O | | |
| | Voice Mail | O | | |
| | Settable Voice Mail Center Number | X | | |
| | Message Protocol | X | | |
| | Message Overflow Indicator | O | | |
| | Message Center Number | O | | |
| | Help Menu | X | | |
| Multimedia Messaging | Picture Attachable | O | | Max bytes is it, According to inserted usim |
| | Moving Picture Attachable | O | Video MMS | Max bytes is it, According to inserted usim |
| | Voice Attachable | O | AMR | |
| | Help Menu | X | | |



Copyright ⓒ 2019 LG Electronics. Inc. All right reserved.
Only training and service purposes

## 2.6 SW Specification

| | | | | |
|---|---|---|---|---|
| Instant Messaging Service | IM | X | | Android App can be downloaded in Play Store |
| | PC Compatable | X | | |
| | Menu Option | X | | |
| E-Mail | Protocol | O | IMAP4 | |
| | | O | SMTP | |
| | | O | POP3 | |
| | | X | Help Menu | |
| Voice Instant Messaging Service | PTT | X | Full Duplex | |
| | | X | Half Duplex | |
| | Menu Option | X | Grouping | |
| | | X | Status List | |
| | | X | Help | |
| | | X | Others | |
| Sound Contents | Wallpaper | X | | |
| | Screen Saver | X | | |
| | Ringtones | O | | |
| | Karaoke | X | | |
| | Stutter Sound | O | | |
| | Flip tone | X | | |
| | Button tone | O | can be enable or disable button press sound. | |
| | Others | X | | |
| Calendar | New Event | O | | |
| | Edit Event | O | | |
| | Agenda | O | | |
| | Reminder | O | | |
| | Google sync | O | | |
| Miscellaneous Function | Development & Test Facility | O | | |
| | Field Test Facility | X | | |
| | Display Software Version | O | | |
| | IMEI | O | *#06# | |
| Text Input | Language | O | | |
| | Predictive word input | O | T9 predictive supported. | |
| Scheduler | Schedule | O | | |
| | To Do List | O | | |
| | Memo | O | | |
| | D-day counter | X | | |
| | Send via Bluetooth | O | | |
| World Time | Setting Local Time | O | | |
| | Display Two Number of Cities Time | X | | |



Copyright ⓒ 2019 LG Electronics. Inc. All right reserved.
Only training and service purposes

## 2.6 SW Specification

| | | | | |
|---|---|---|---|---|
| Unit converter | | X | | |
| Stop watch | | O | | |
| Calculator | Calculation | O | | |
| PC Sync | Phone Book Sync | X | PC Bridge supports backup and restore (not sync) | |
| | Message Sync | x | PC Bridge supports backup and restore (not sync) | |
| | Multimedia Contents Sync | x | PC Bridge supports backup and restore (not sync) | |
| | Scheduler Sync | X | PC Bridge supports backup and restore (not sync) | |
| Sync ML | DS | X | | |
| | DM | X | | |
| Game | | X | | |
| Menu | Quick Access Mode (Profile) | O | | |
| External Interface | Electrical Man Machine Interface | X | | |
| | Development and Test Facility | X | | |
| Handset | Restore Factory Setting | O | | |
| | Read Software Version | O | | |
| | Battery Charging Mode | O | USB/ TA Charging | USB/ TA Charging |
| Security | Emergency Call | O | | |
| | Handset Lock | O | | |
| | Security Code | O | | |
| | SIM Lock | O | | |
| | Key guard | X | | |
| Real Time Clock | 12/24 hour | O | | |
| | Calendar | O | | |
| | Time Zone | O | | |
| | Alarm Manager | O | | |
| | Dimming Clock | X | Battery power<br>15s, 30s, 1min, 2min, 10min, 15min<br>External power<br>15s, 30s, 1min, 2min, 10min, 15min | Screen timeout supports |
| | Power-off Alarm | X | | |
| | On Alarm Event | O | Display | |



Copyright ⓒ 2019 LG Electronics. Inc. All right reserved.
Only training and service purposes

## 3.1 Checking XO Block

**The out put frequency(26MHz) of XO(X0801) is used as the reference one of MT6739 internal DCO**

### Checking Flow

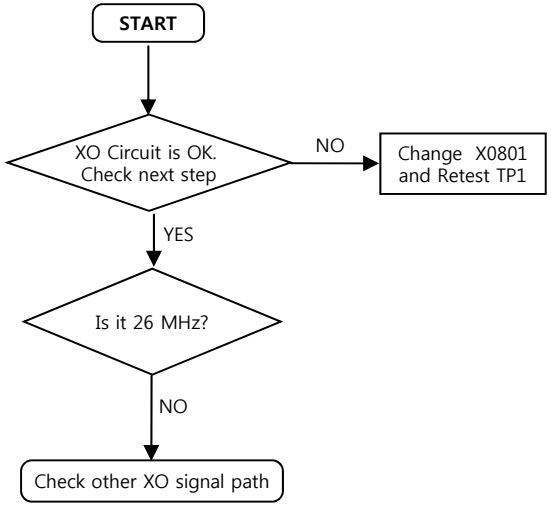


### Image

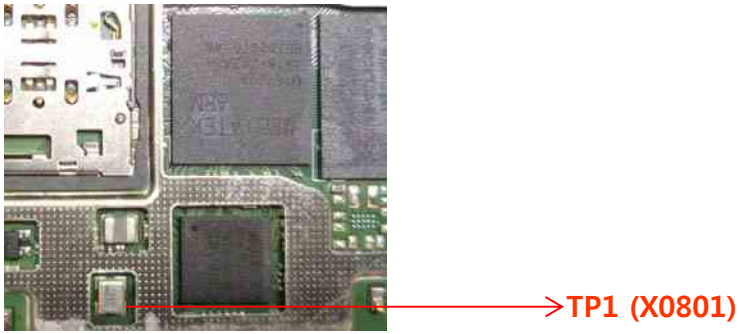


### Circuit Diagram

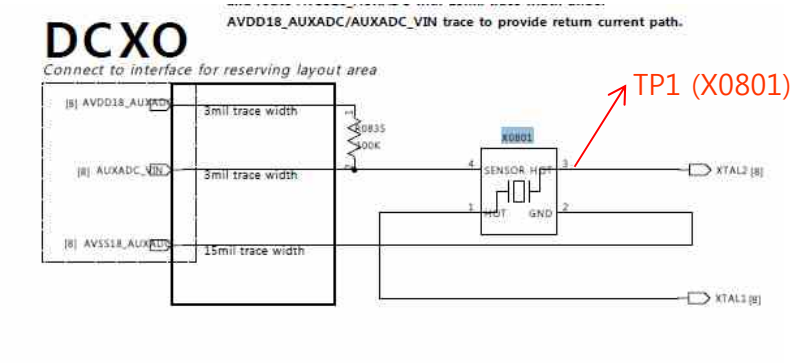




Copyright © 2019 LG Electronics. Inc.
All right reserved. Only training and service purposes

**The MT6177M operating voltages used two voltage sources 1.8V and 1.2V**

### Checking Flow

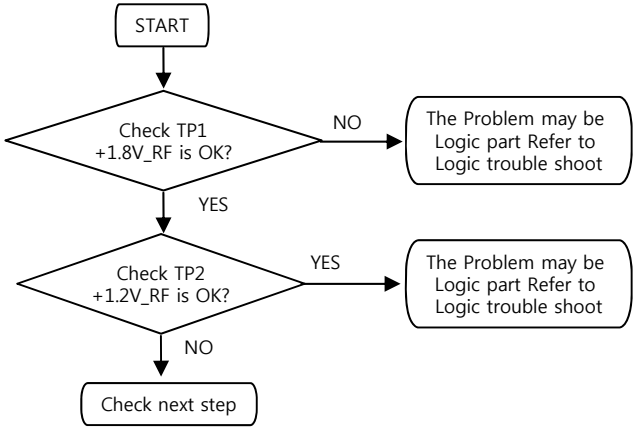


### Image

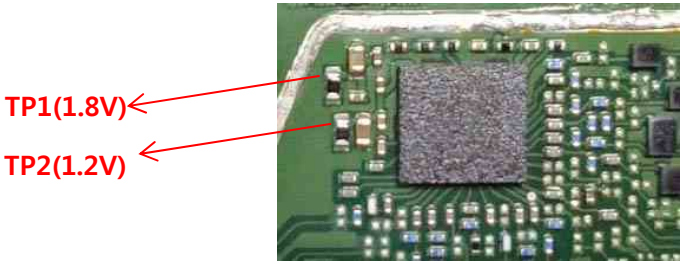


### Circuit Diagram

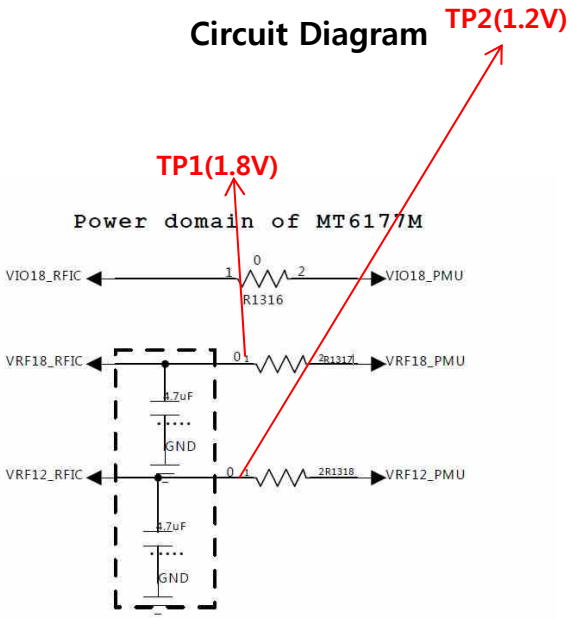




Copyright © 2019 LG Electronics. Inc. All right reserved. Only training and service purposes

**The PMIC(MT6357, U0704) output voltages is used as the reference one of RF Device**

## Checking Flow

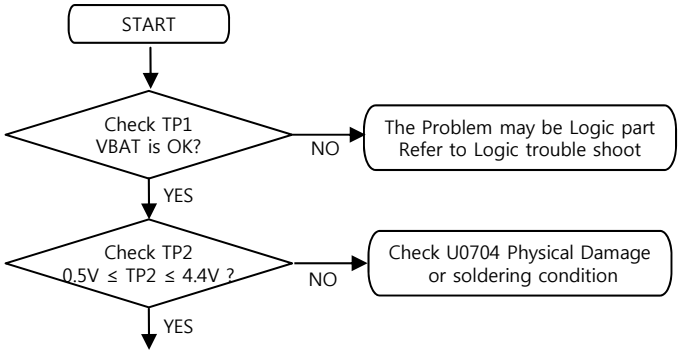


## Image

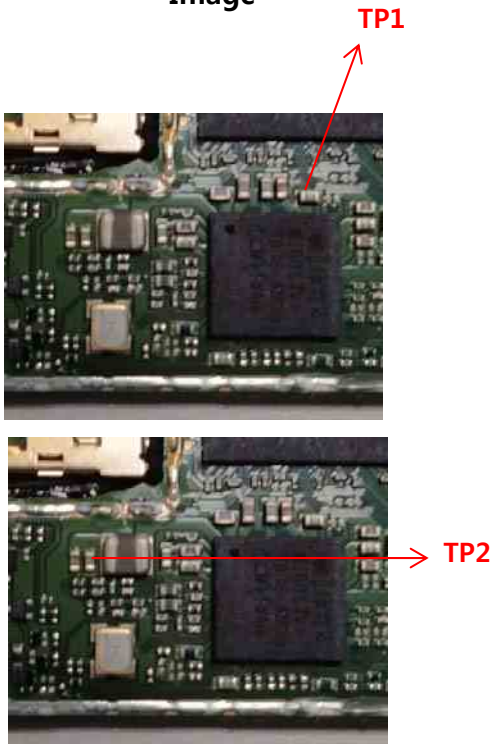


## Circuit Diagram

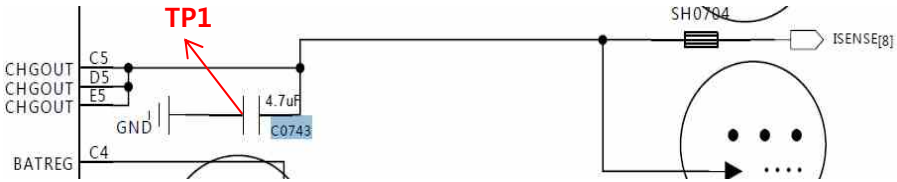


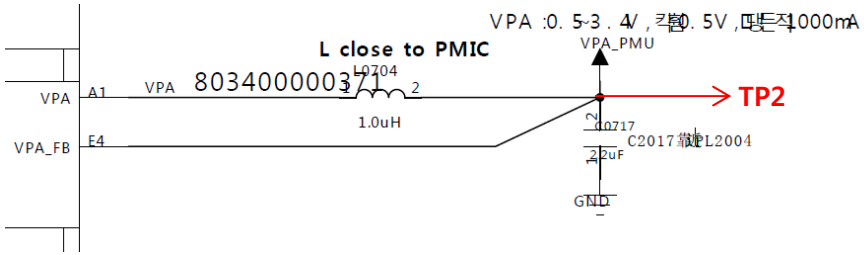




Copyright © 2019 LG Electronics. Inc. All right reserved. Only training and service purposes

## Checking ASM Block

### Checking Flow

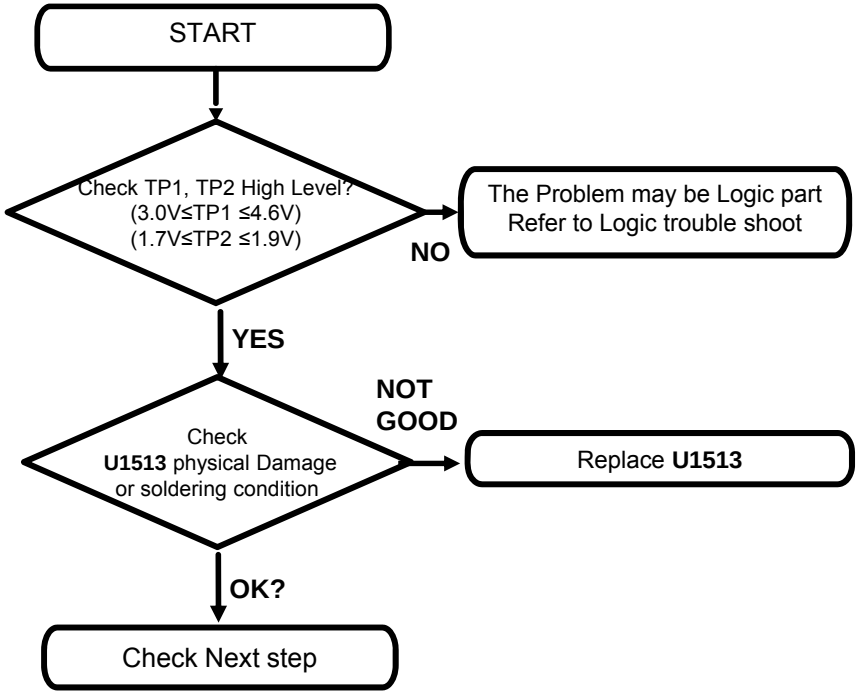


### Image

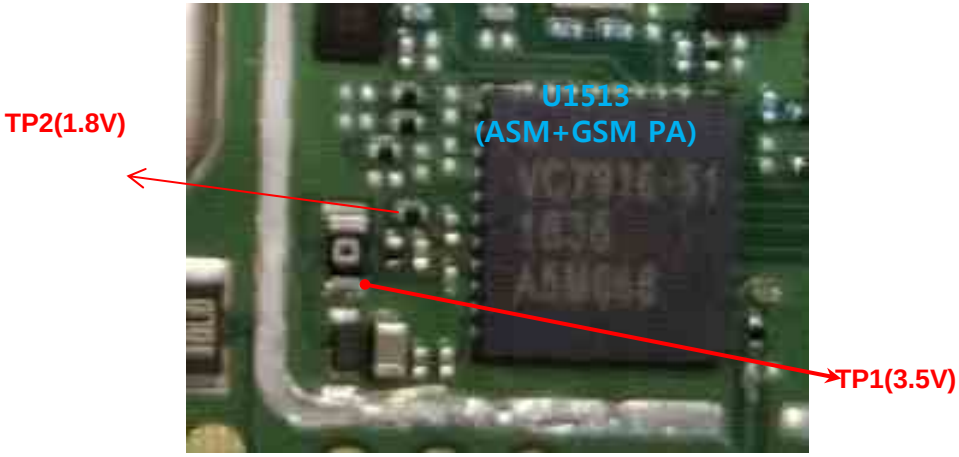


### Circuit Diagram

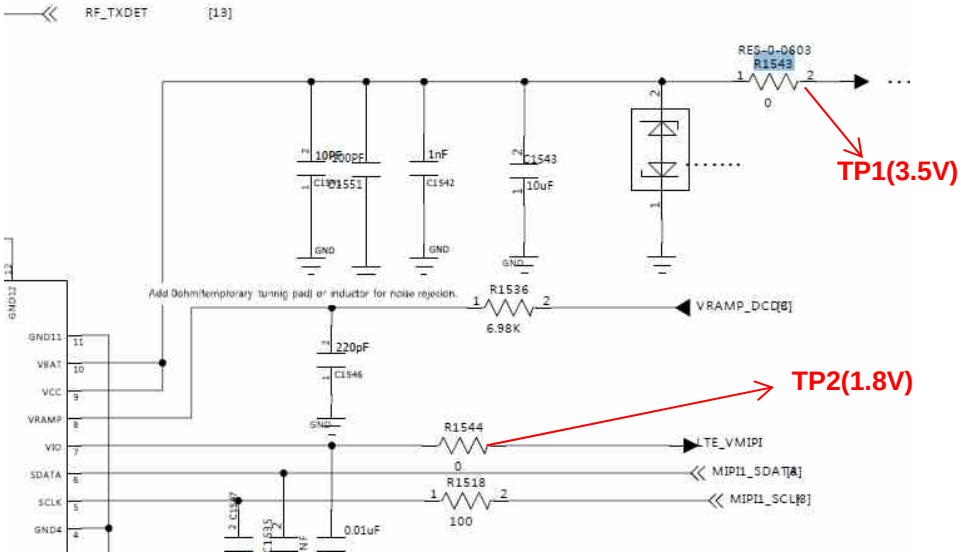




Copyright © 2019 LG Electronics. Inc. All right reserved.
Only training and service purposes

### 3.5.1 GSM RF PART

**GSM RF Part support GSM850/900/1800/1900 with ASM, PAM, Transceiver component**

**Checking Flow**

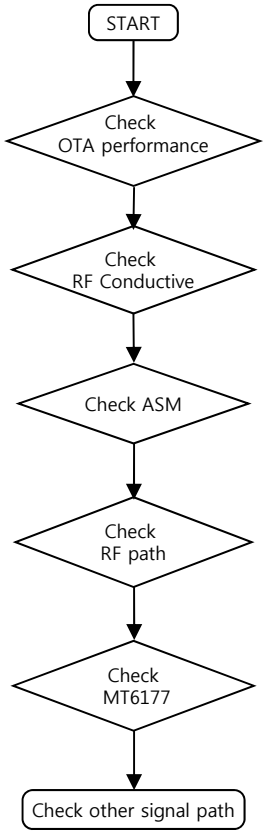



Copyright © 2019 LG Electronics. Inc. All right reserved.
Only training and service purposes

### 3.5.1 GSM RF PART

**GSM850/900/1800/1900 Tx/Rx Path**

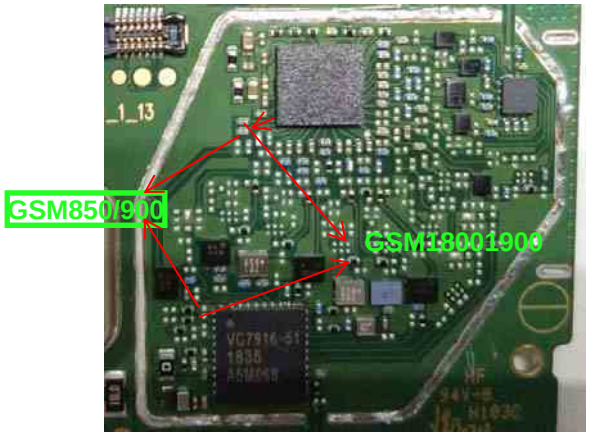


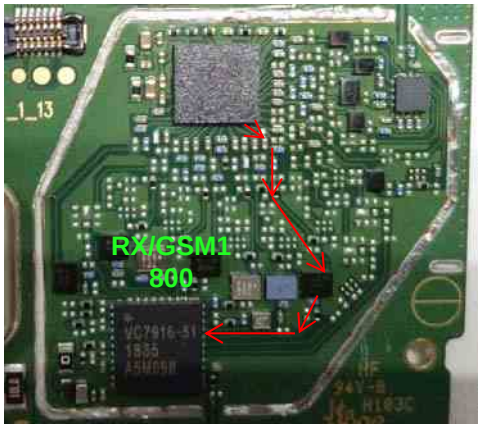


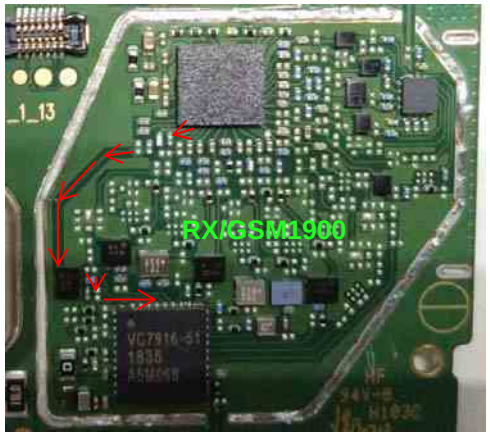


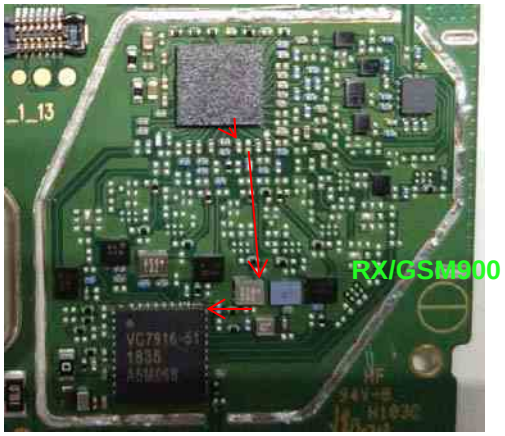

Copyright © 2019 LG Electronics. Inc. All right reserved.
Only training and service purposes

### 3.5.1 GSM RF PART

**Checking RF signal path (SW)**

**Checking Flow**

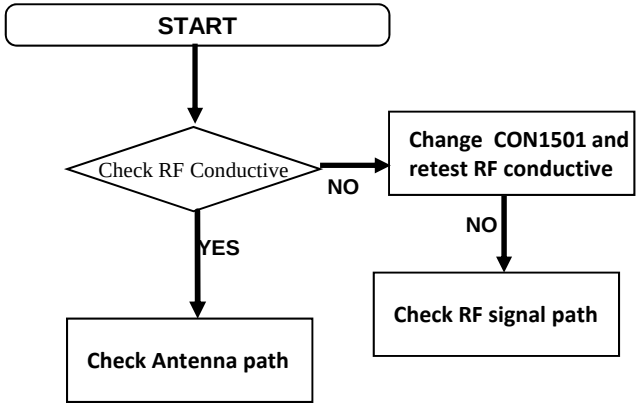


**Image**

Main
Bot

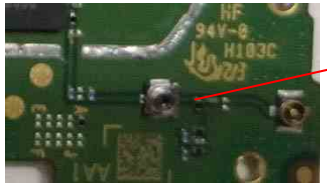

CON1501

TP1(CON1501)

CON1501

**Circuit Diagram**

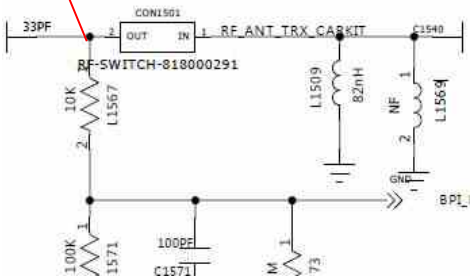




Copyright © 2019 LG Electronics. Inc. All right reserved.
Only training and service purposes

### 3.5.1 GSM RF PART

#### Checking RF Signal RX path(GSM850)

**Checking Flow**

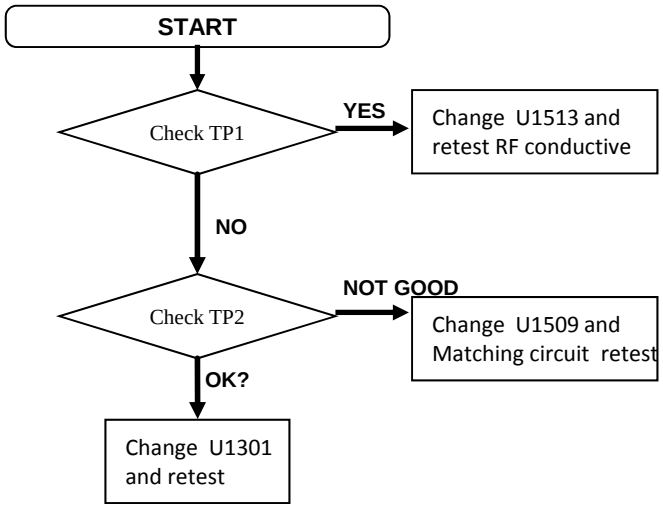


**Image**

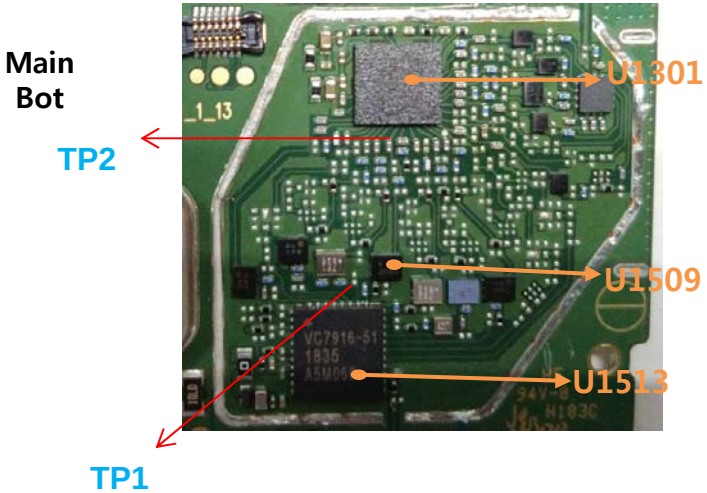


**Circuit Diagram**

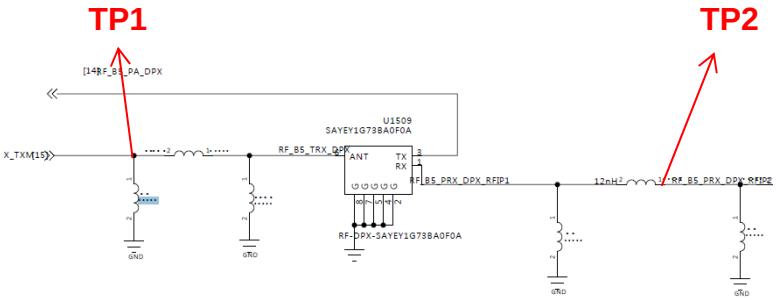




Copyright © 2019 LG Electronics. Inc. All right reserved.
Only training and service purposes

### 3.5.1 GSM RF PART

**Checking RF Signal RX path(GSM900)**

**Checking Flow**

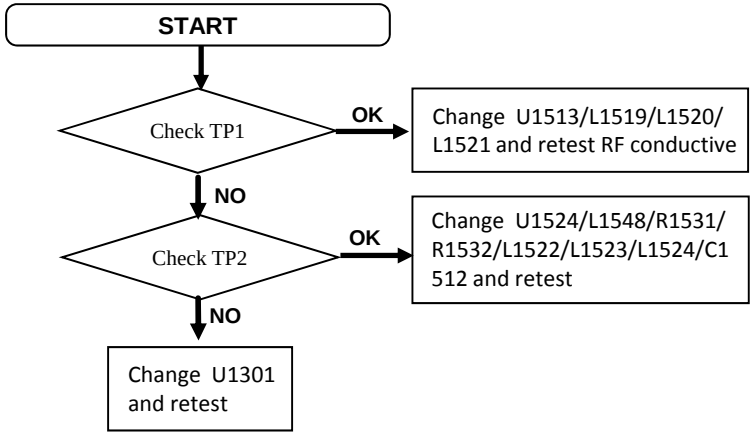


**Image**

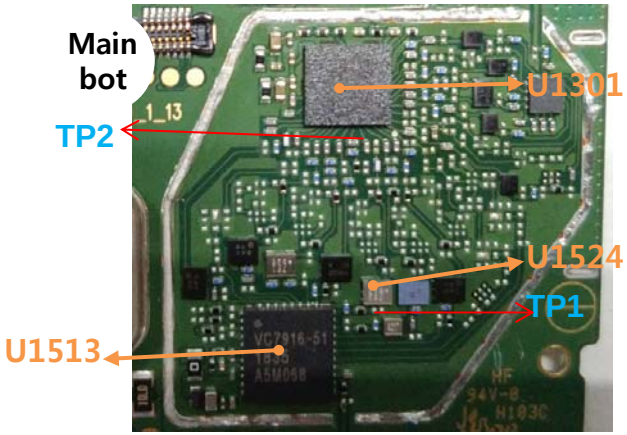


**Circuit Diagram**

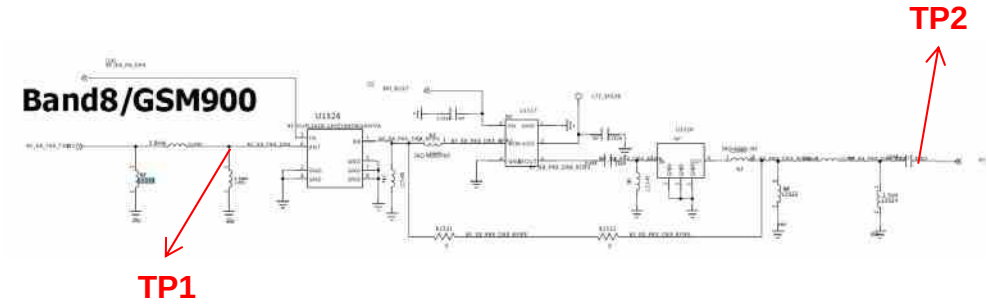




Copyright © 2019 LG Electronics. Inc. All right reserved.
Only training and service purposes

### 3.5.1 GSM RF PART

**Checking RF Signal RX path(GSM1800)**

**Checking Flow**

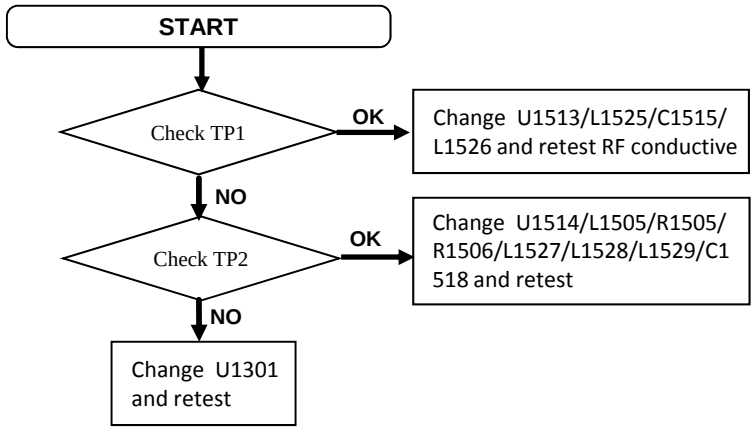


**Image**

Main bot

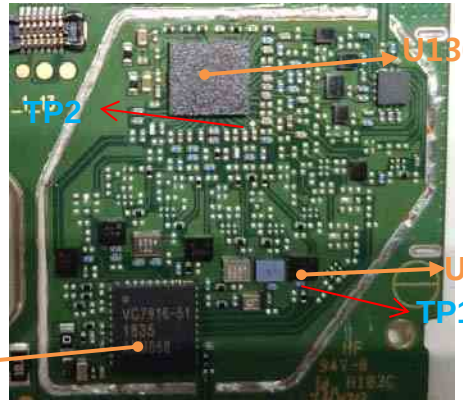


**Circuit Diagram**

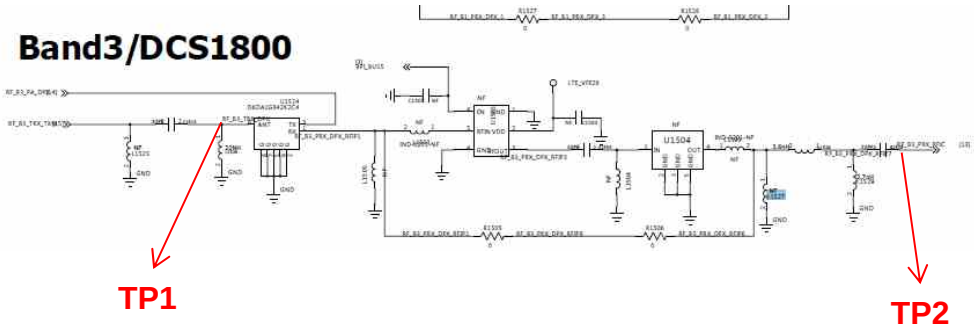




Copyright © 2019 LG Electronics. Inc. All right reserved.
Only training and service purposes

### 3.5.1 GSM RF PART

#### Checking RF Signal RX path(GSM1900)

**Checking Flow**

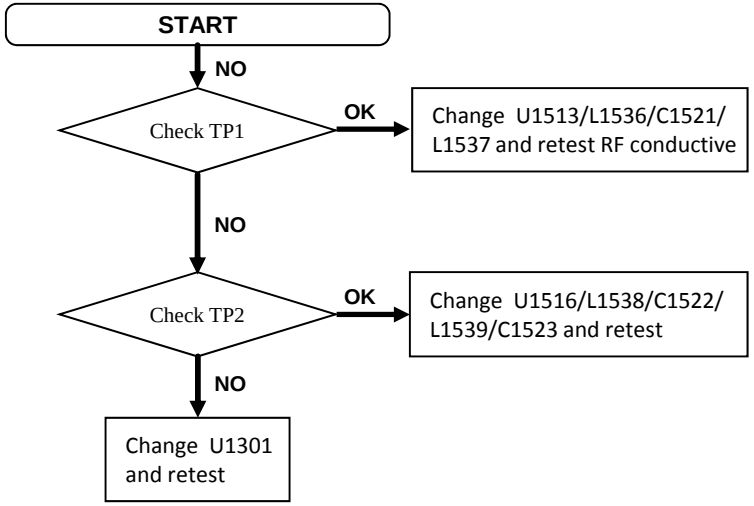


**Image**

Main bot

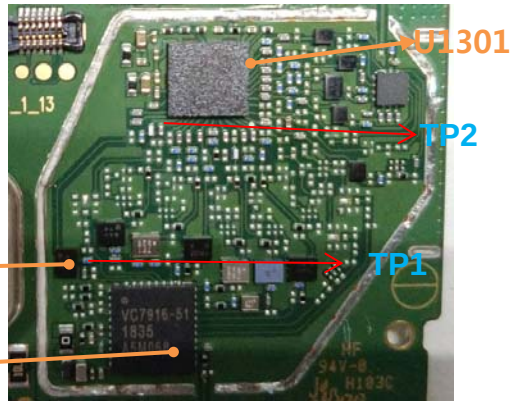


**Circuit Diagram**

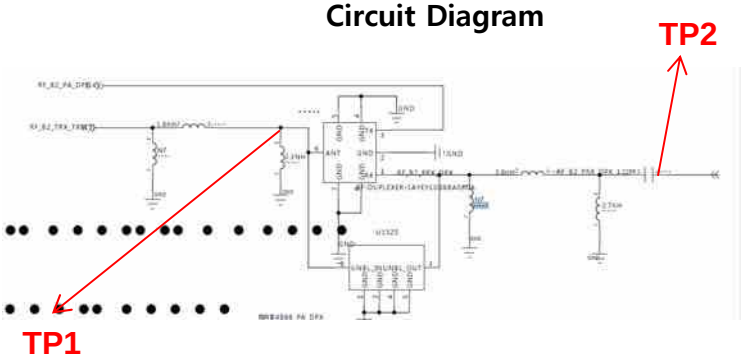




Copyright © 2019 LG Electronics. Inc. All right reserved.
Only training and service purposes

### 3.5.1 GSM RF PART

**GSM850/900/1800/1900 Tx**

**Main Bot**

1. GSM850/GSM900 TX PATH
2. DCS1800/PCS1900 TX PATH
3. COMMON TX/RX PATH

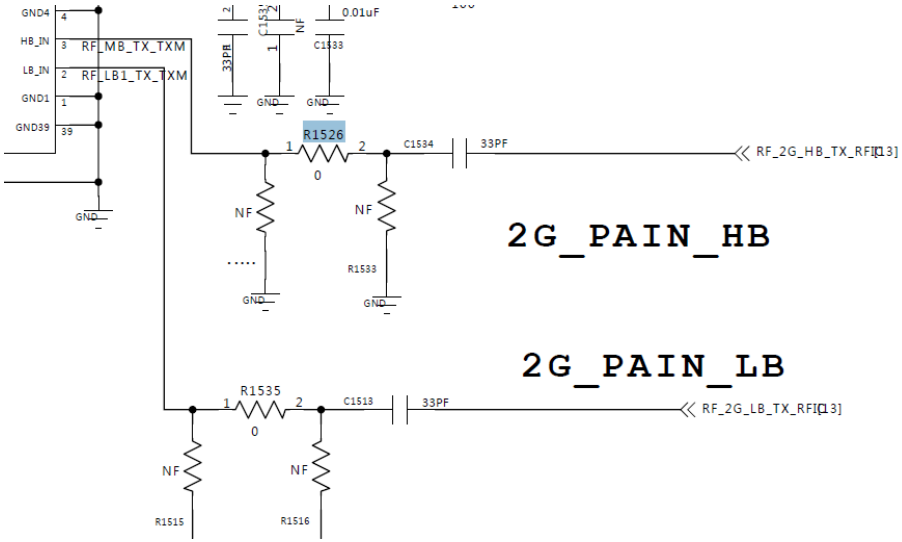




Copyright © 2019 LG Electronics. Inc. All right reserved.
Only training and service purposes

### 3.5.1 GSM RF PART

**Checking GSM PAM DC Power Circuit**

**Checking Flow**

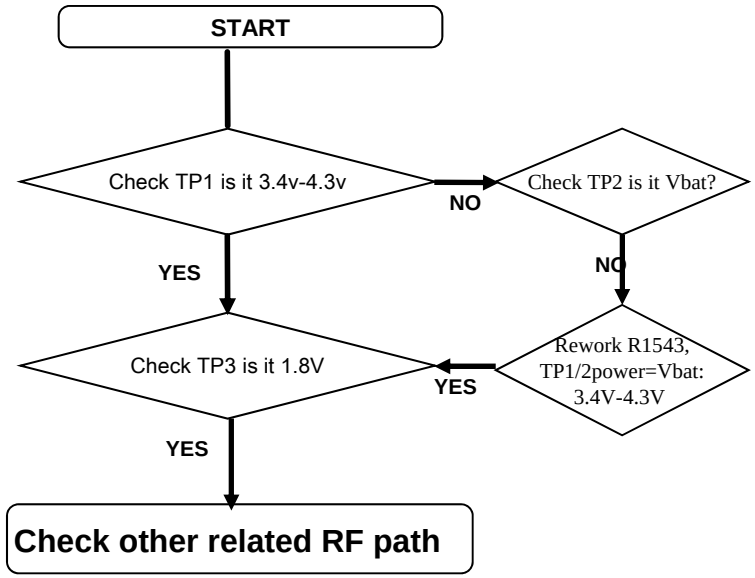


**Image**

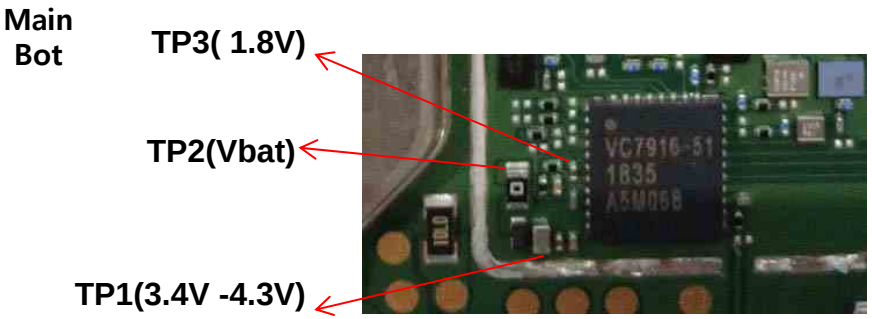


**Circuit Diagram**

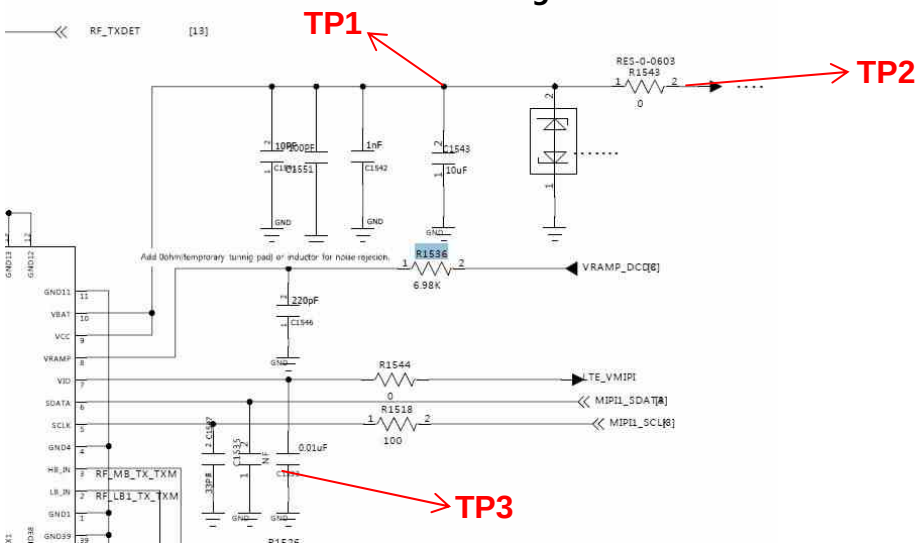




Copyright © 2019 LG Electronics. Inc. All right reserved.
Only training and service purposes

### 3.5.2WCDMA RF Part

**WCDMA RF Part support WCDMA B1/2/4/5/8 with FEM, PAM, PA, Transceiver component**

**Checking Flow**

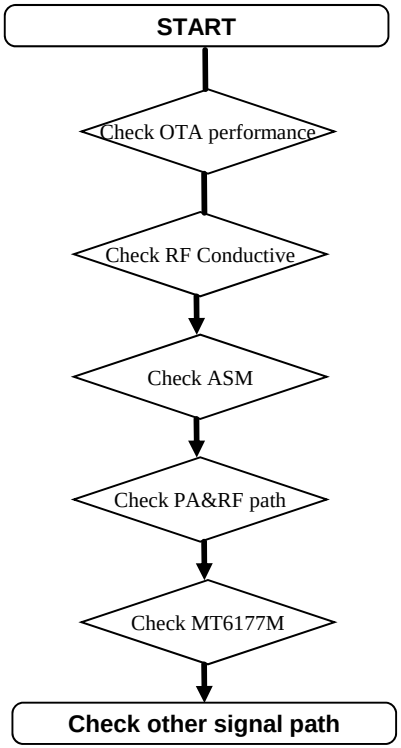



Copyright ⓒ 2019 LG Electronics. Inc. All right reserved.
Only training and service purposes

### 3.5.2 WCDMA PART

**Checking RF Signal TX path(WCDMA/LTE_B1)**

**Checking Flow**

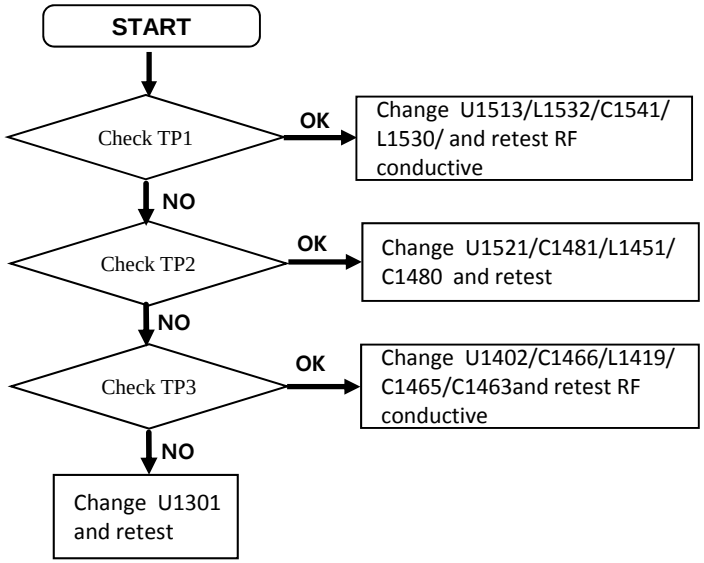


**Image**

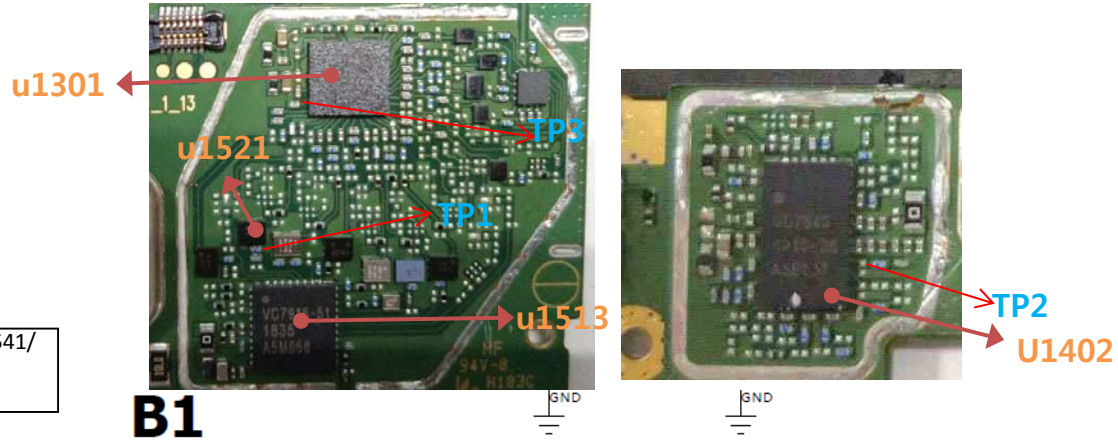


**Circuit Diagram**

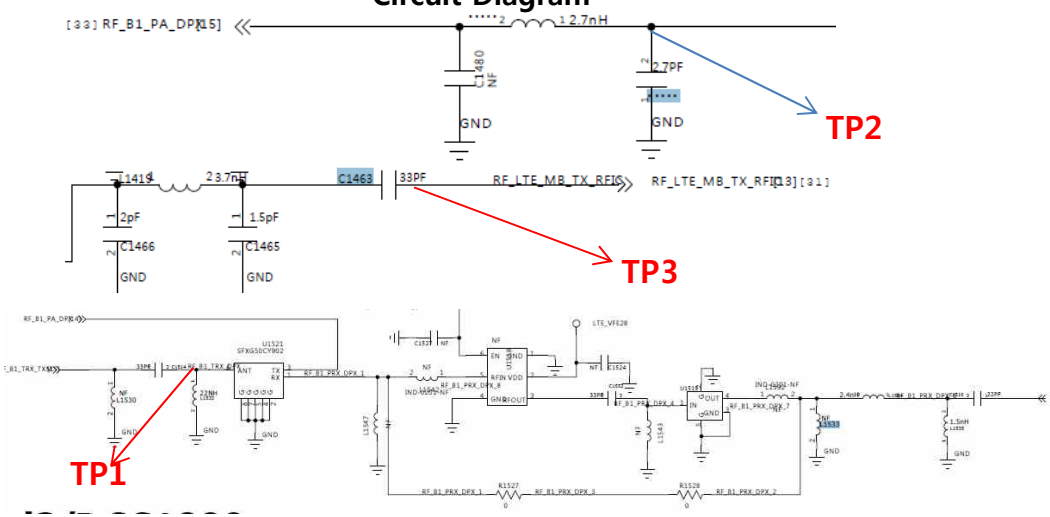




Copyright © 2019 LG Electronics. Inc. All right reserved.
Only training and service purposes

### 3..5.2WCDMA PART

### Checking RF Signal PRX path(WCDMA_B1 (LTE _B1)

**Checking Flow**

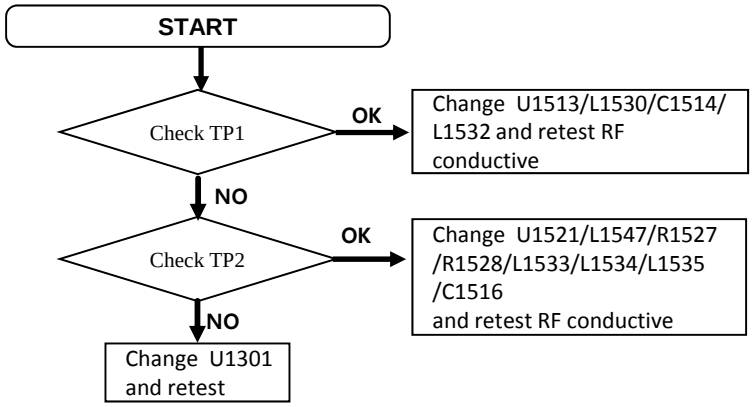


**Image**

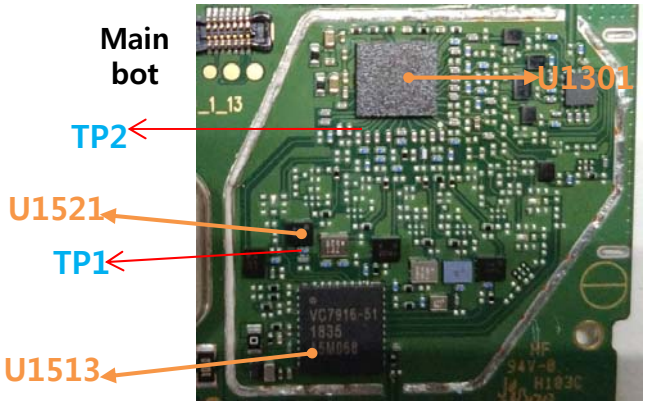


**Circuit Diagram**

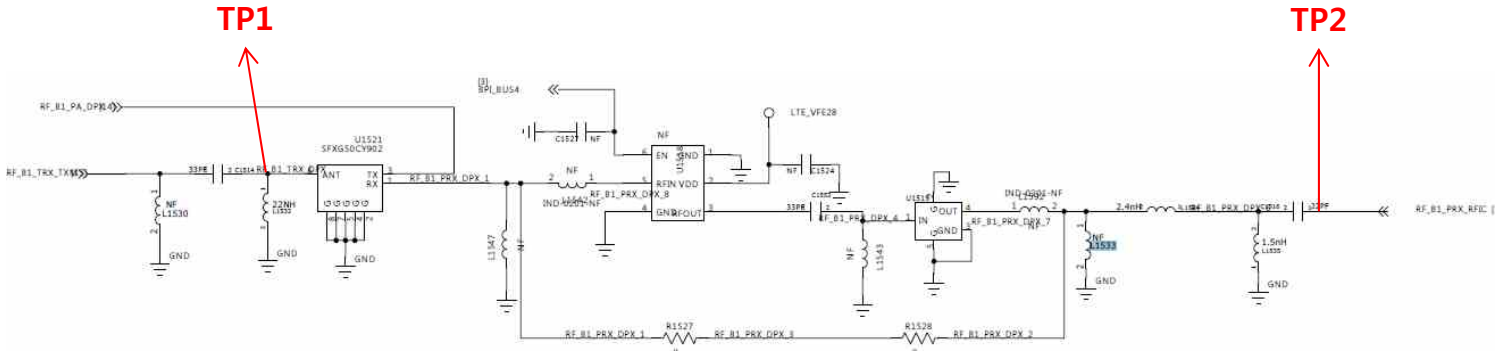




Copyright © 2019 LG Electronics. Inc. All right reserved.
Only training and service purposes

## 3..5.2 WCDMA PART

### Checking RF Signal DRX path(WCDMA/LTE_B1/4/66)

**Checking Flow**

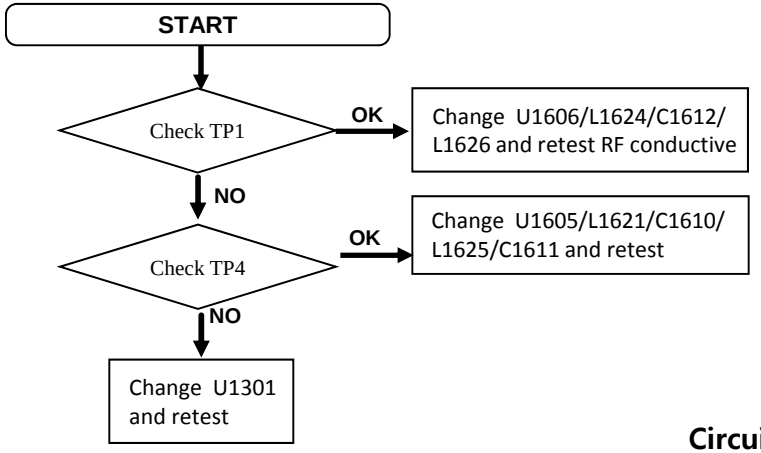


**Image**

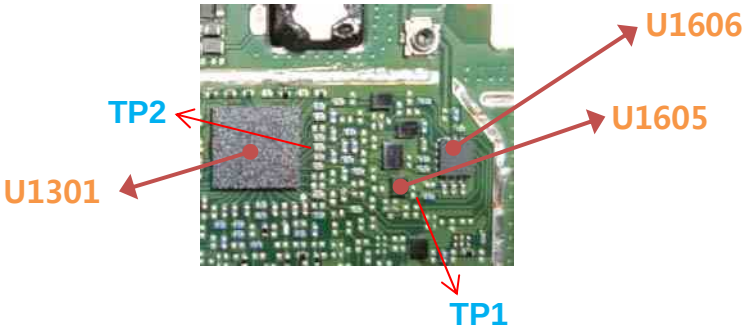


**Circuit Diagram**

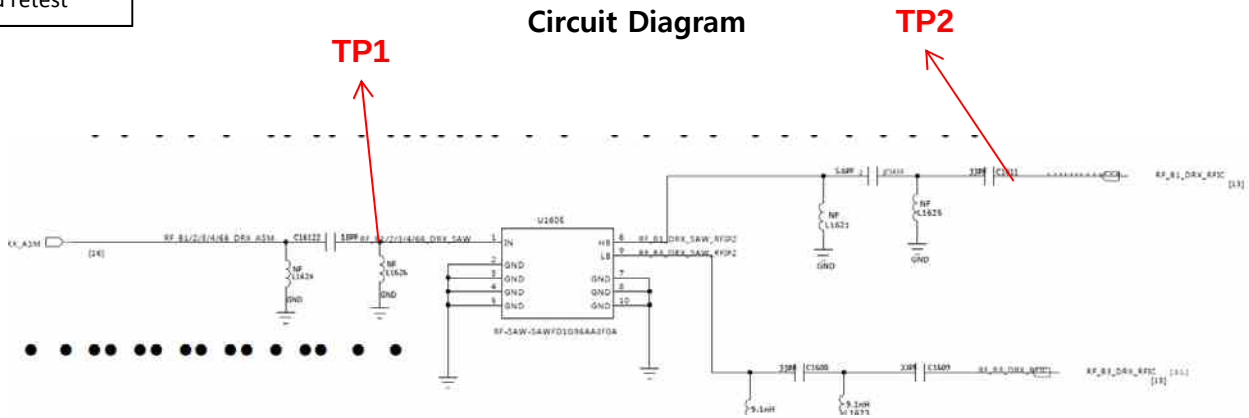




Copyright © 2019 LG Electronics. Inc. All right reserved.
Only training and service purposes

### 3.5.2 WCDMA PART

**Checking RF Signal TX path(WCDMA/LTE_B2)**

**Checking Flow**

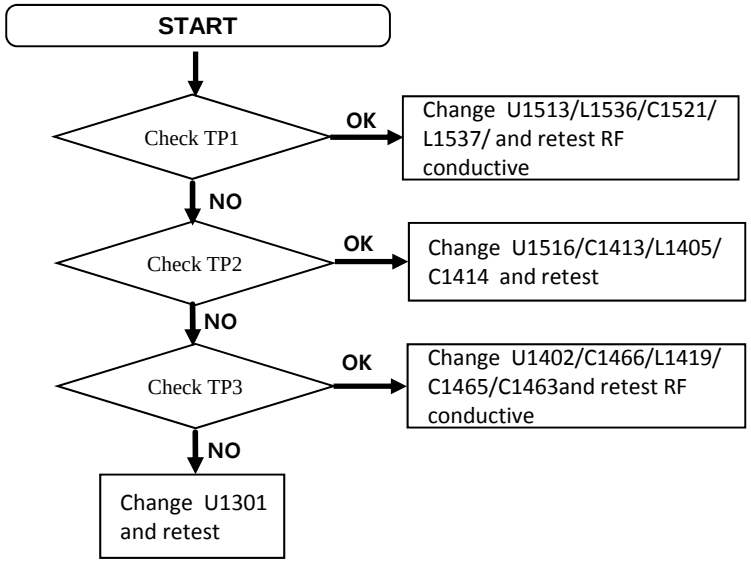


**Image**

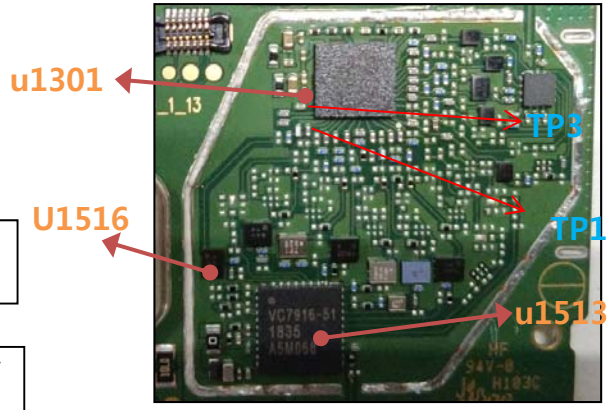


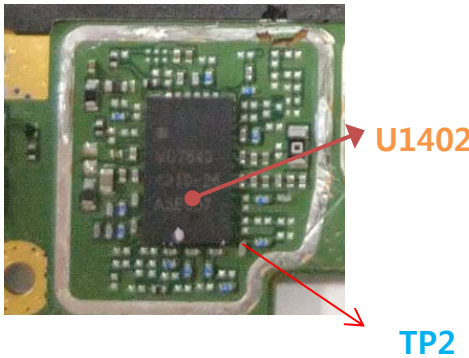


**Circuit Diagram**

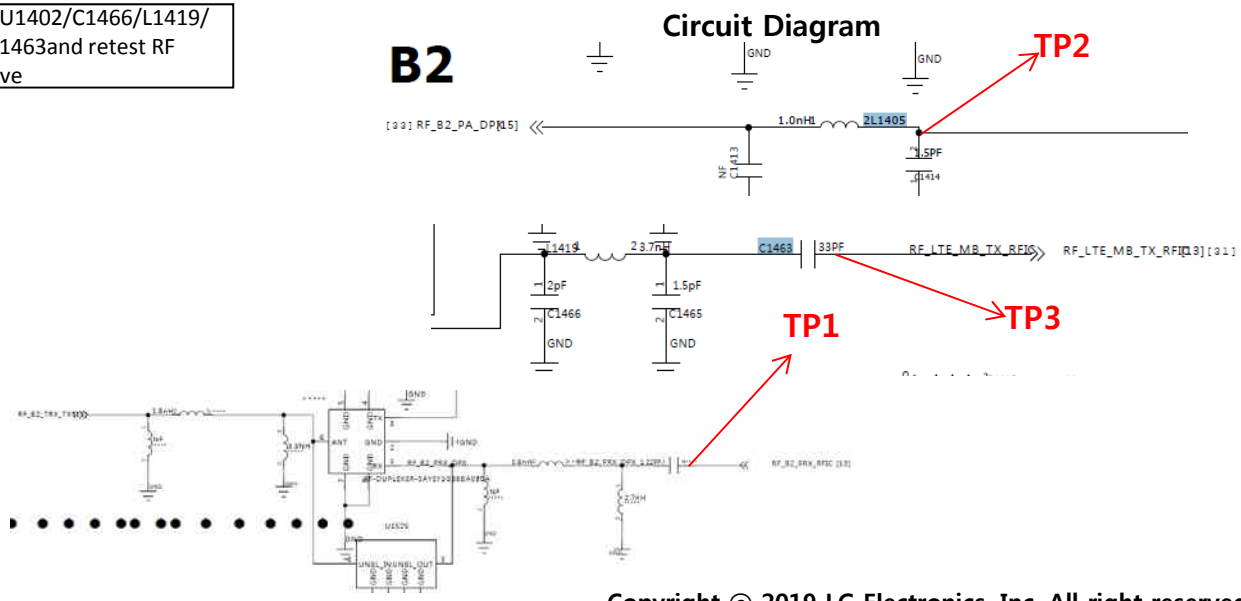




Copyright © 2019 LG Electronics. Inc. All right reserved.
Only training and service purposes

### 3.5.2 WCDMA PART

**Checking RF Signal PRX path(WCDMA/LTE_B2), is same as RF Signal RX path(GSM1900)**


Copyright ⓒ 2019 LG Electronics. Inc. All right reserved.
Only training and service purposes

### 3.5.2 WCDMA PART

**Checking RF Signal DRX path(WCDMA/LTE_B2)**

**Checking Flow**

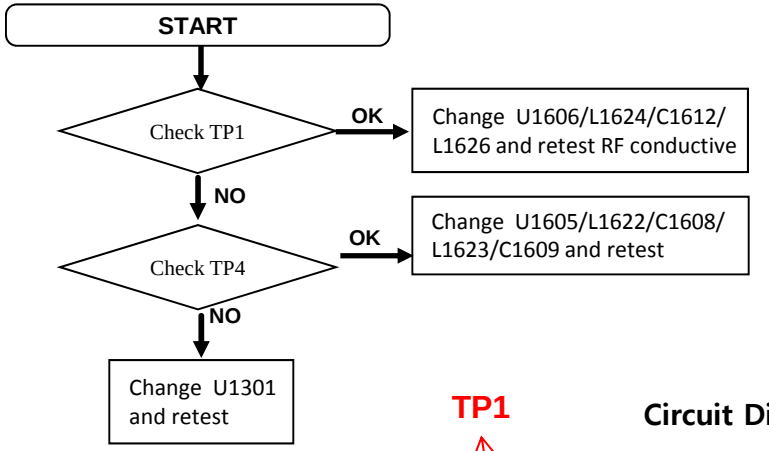


**Image**

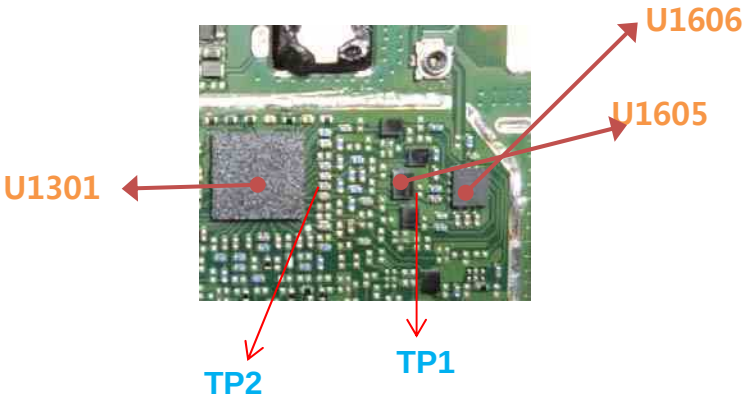


**Circuit Diagram**

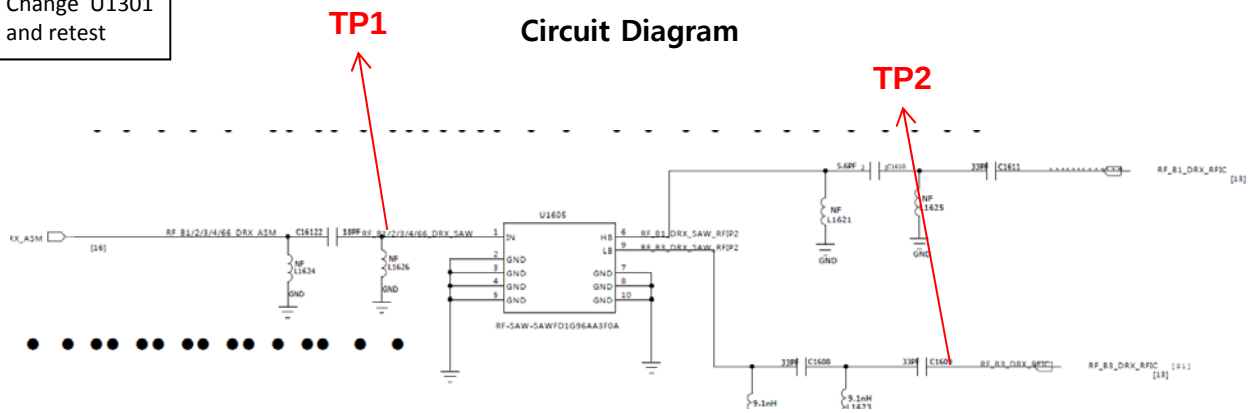




Copyright © 2019 LG Electronics. Inc. All right reserved.
Only training and service purposes

### 3.5.2 WCDMA PART

**Checking RF Signal TX path(WCDMA/LTE_B4)**

**Checking Flow**

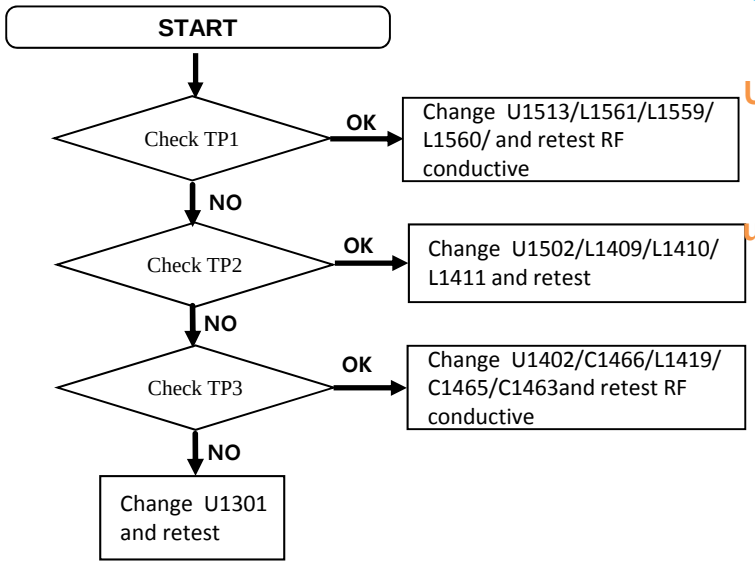


**Image**

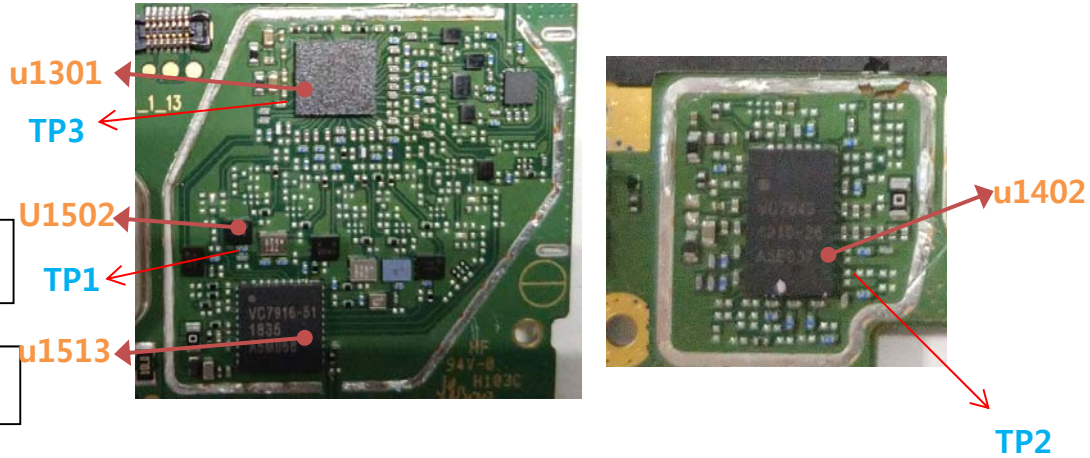


**Circuit Diagram**

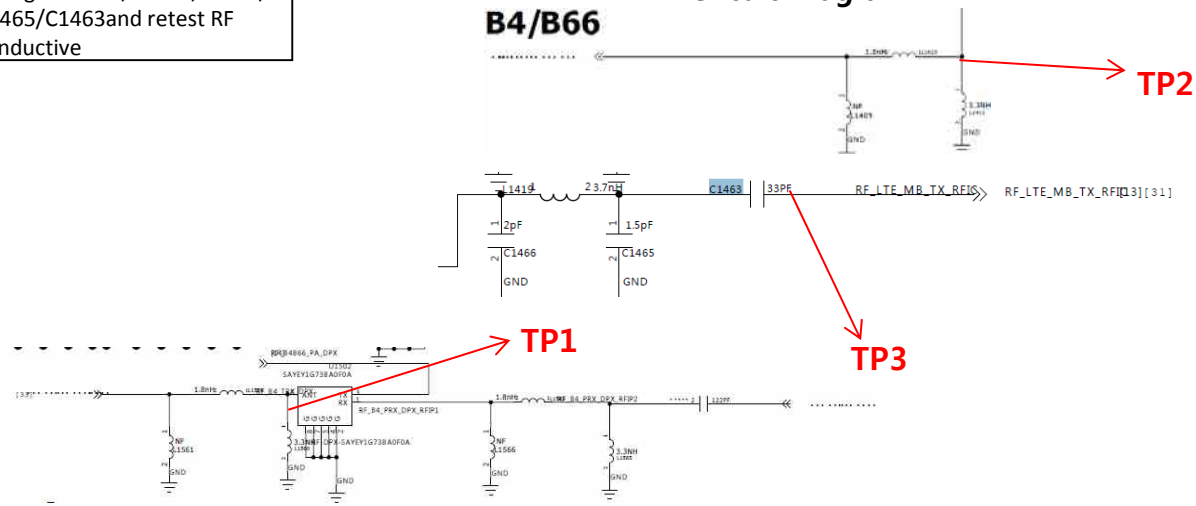




Copyright © 2019 LG Electronics. Inc. All right reserved.
Only training and service purposes

### 3.5.2 WCDMA PART

**Checking RF Signal PRX path(WCDMA/LTE_B4)**

**Checking Flow**

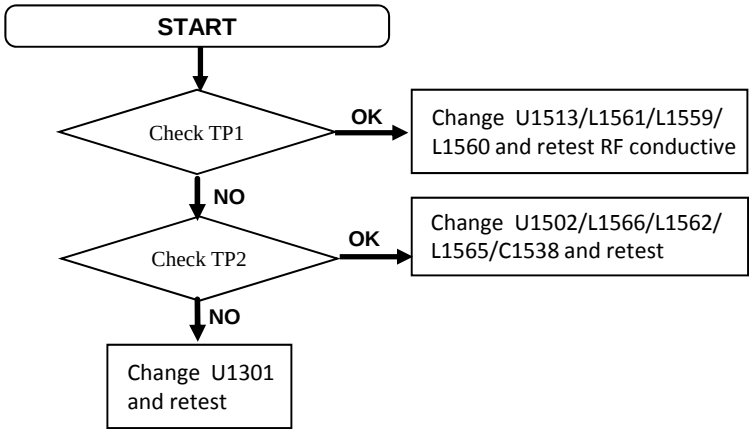


**Image**

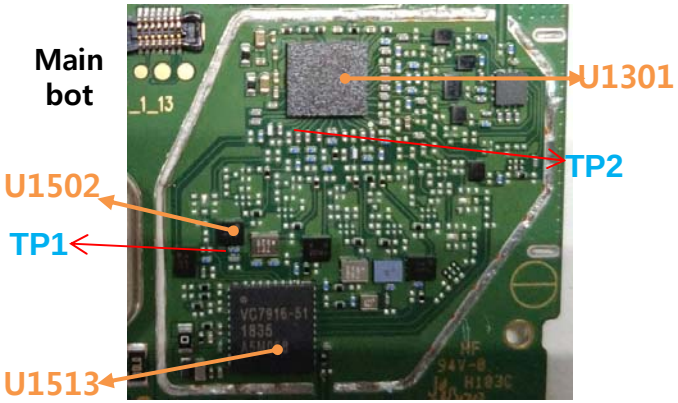


**Circuit Diagram**

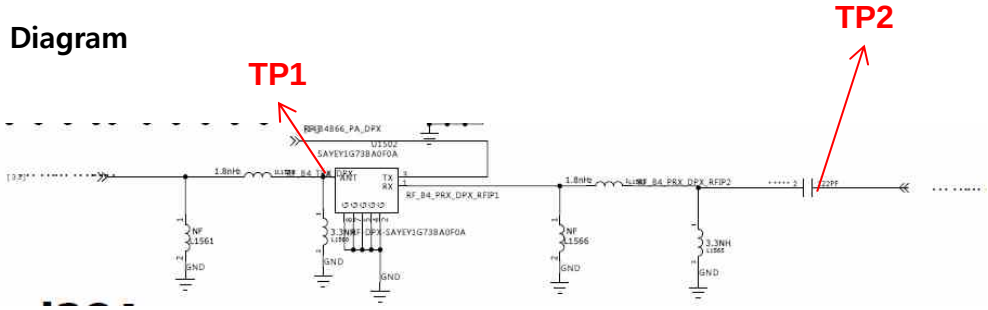




Copyright © 2019 LG Electronics. Inc. All right reserved.
Only training and service purposes

### 3.5.2 WCDMA PART

**Checking RF Signal DRX path(WCDMA/LTE_B4), is same as DRF Signal RX path(WCDMA/LTE_B1)**


Copyright ⓒ 2019 LG Electronics. Inc. All right reserved.
Only training and service purposes

### 3.5.2 WCDMA PART

**Checking RF Signal TX path(WCDMA/LTE_B5)**

**Checking Flow**

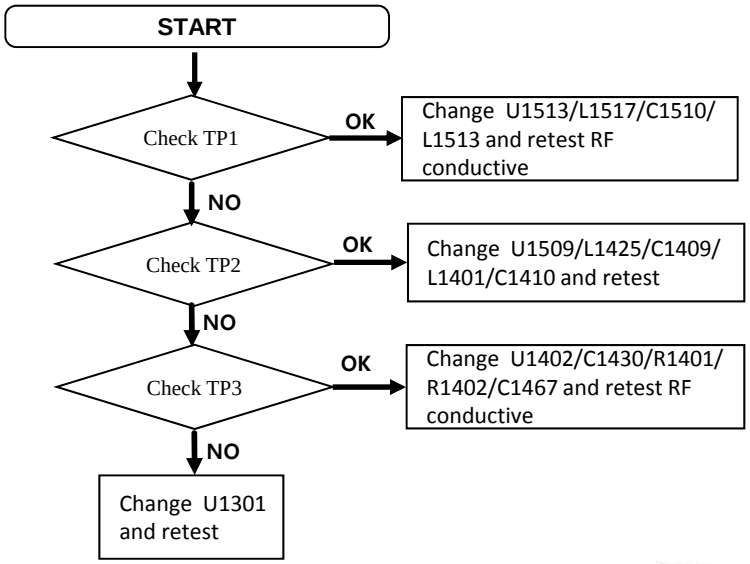


**Image**

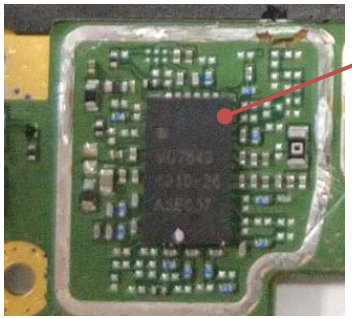


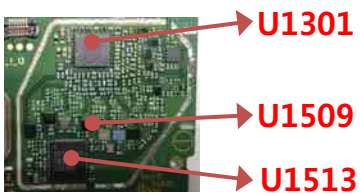


**Circuit Diagram**

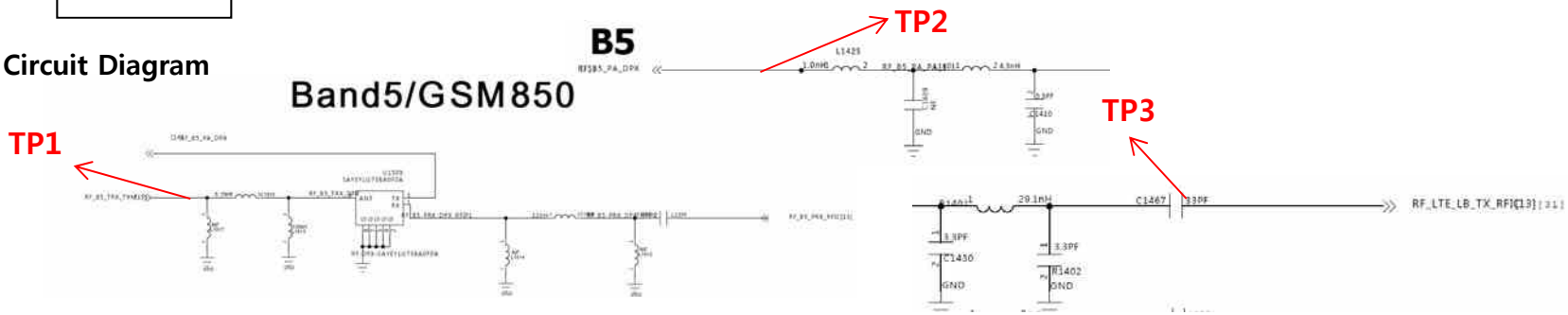




Copyright © 2019 LG Electronics. Inc. All right reserved.
Only training and service purposes

### 3.5.2 WCDMA PART

**Checking RF Signal PRX path(WCDMA/LTE_B5), is same as RF Signal RX path(GSM850)**


Copyright ⓒ 2019 LG Electronics. Inc. All right reserved.
Only training and service purposes

### 3.5.2 WCDMA PART

**Checking RF Signal DRX path(WCDMA/LTE_B5)**

**Checking Flow**

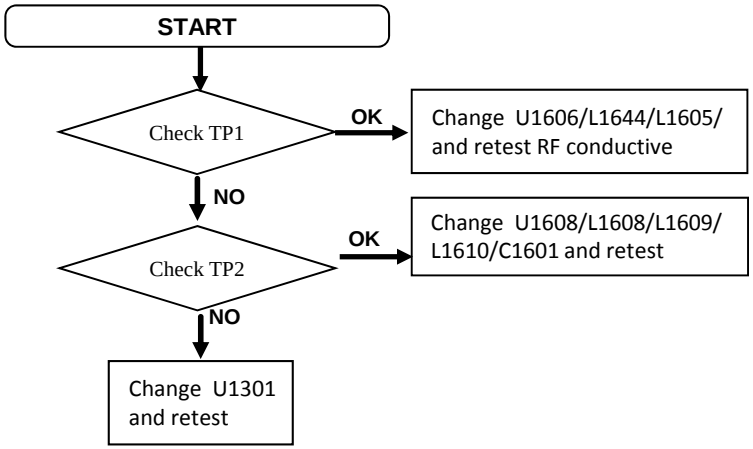


**Image**

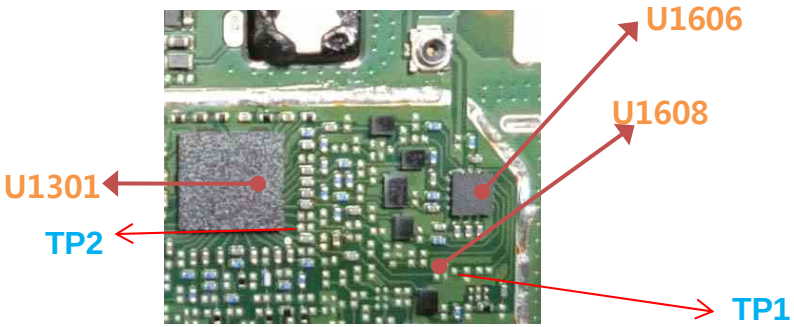


**Circuit Diagram**

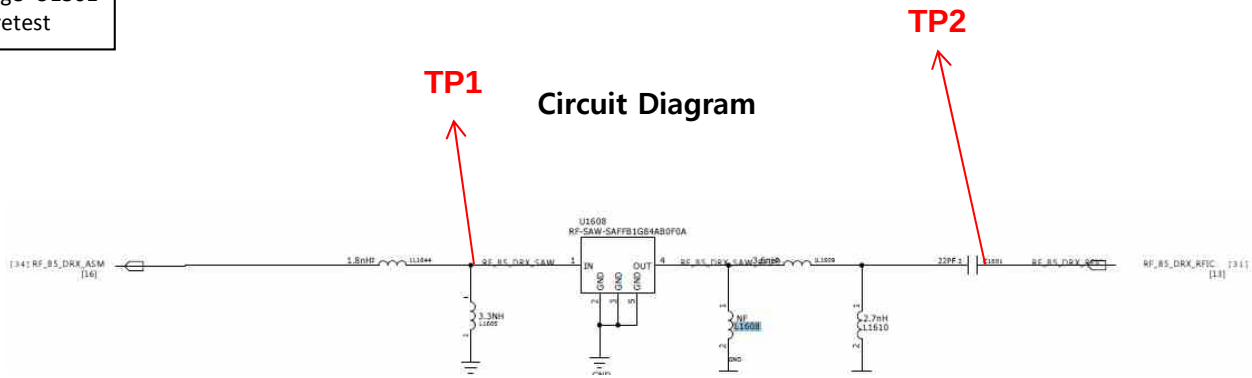




Copyright © 2019 LG Electronics. Inc. All right reserved.
Only training and service purposes

### 3.5.2 WCDMA PART
### Checking RF Signal TX path(WCDMA/LTE_B8)

**Checking Flow**

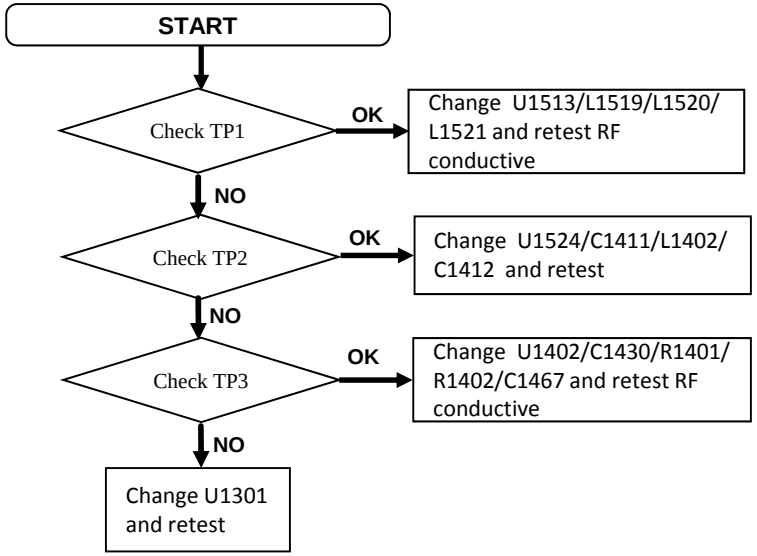


**Image**

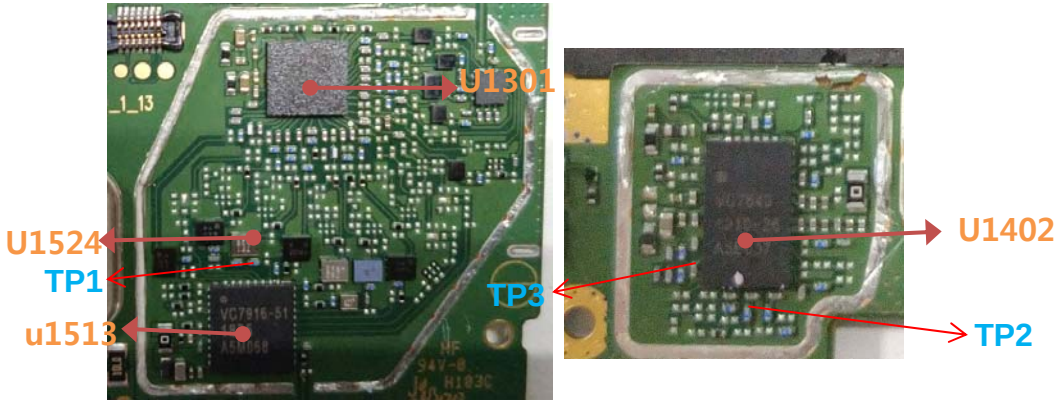


**Circuit Diagram**

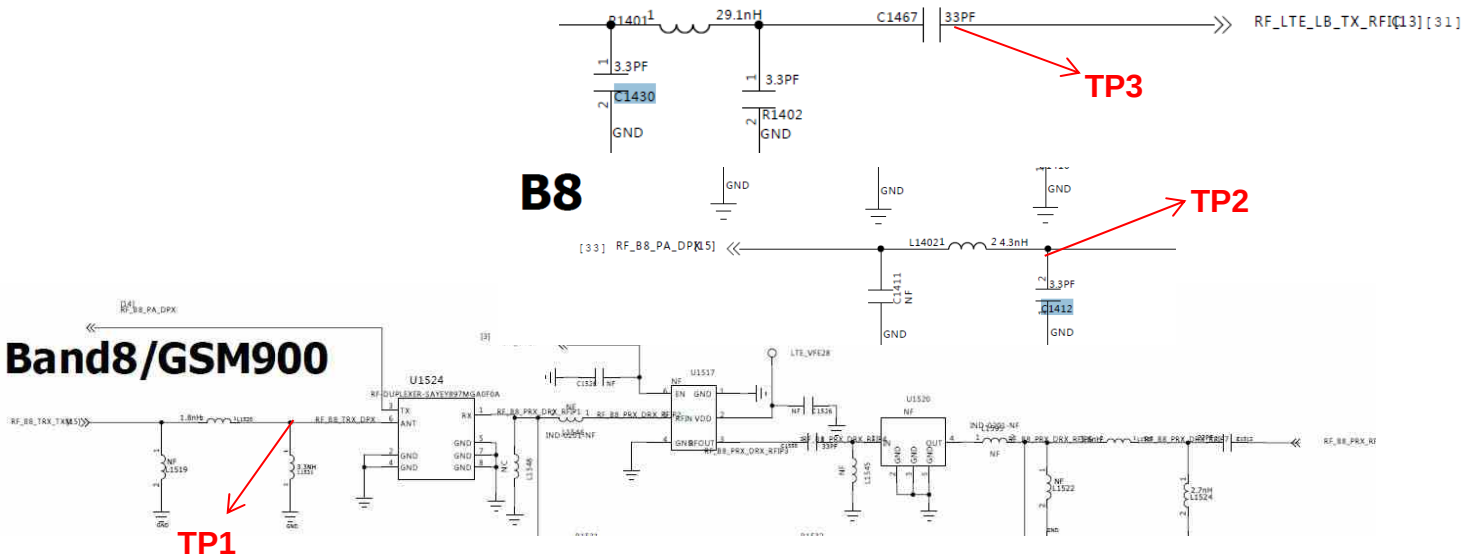




Copyright © 2019 LG Electronics. Inc. All right reserved.
Only training and service purposes

### 3.5.2 WCDMA PART

**Checking RF Signal PRX path(WCDMA/LTE_B8), is same as RF Signal RX path(GSM900)**


Copyright ⓒ 2019 LG Electronics. Inc. All right reserved.
Only training and service purposes

### 3.5.3 LTE RF PART

**LTE RF Part support LTE B1/2/3/4/5/7/8/17/28/66 with FEM, PAM, PA, Transceiver component**

**LTE RF Part (B8)---WCDMA-B8 DRX**

**Checking Flow**

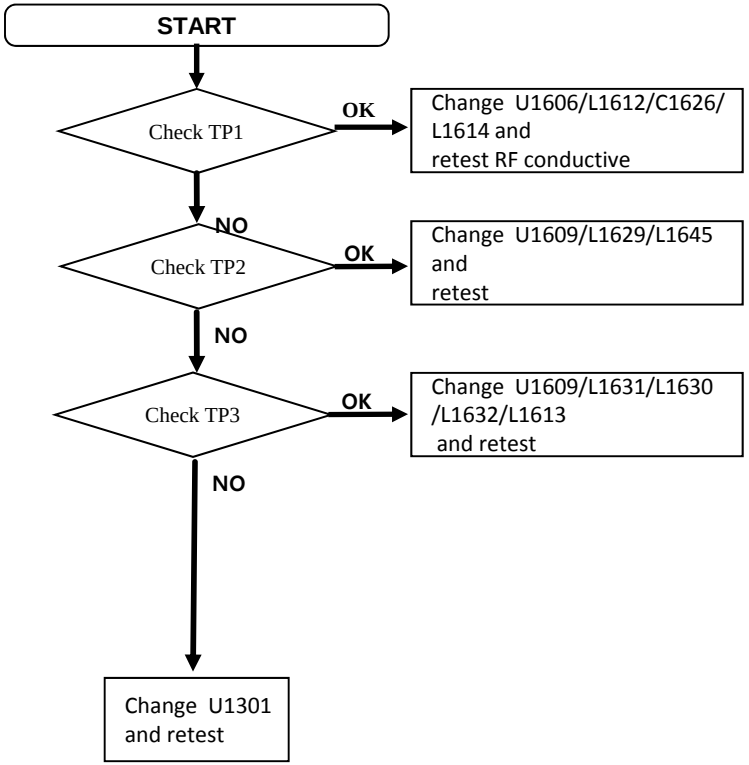


**Image**

**Main Bot**

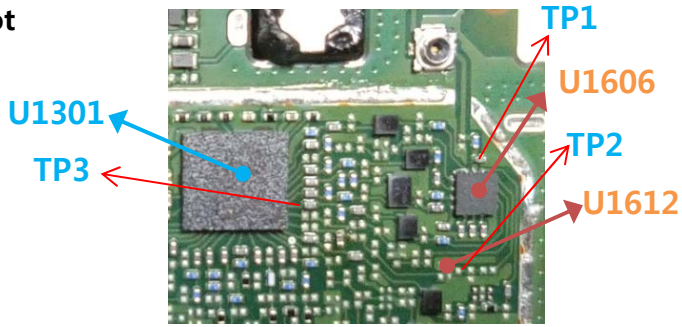


**Circuit Diagram**

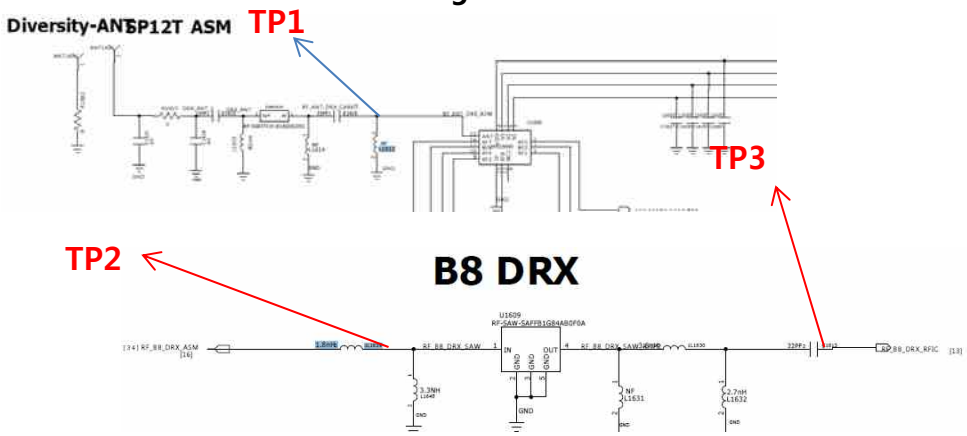




Copyright © 2019 LG Electronics. Inc. All right reserved.
Only training and service purposes

## 3.5 WCDMA PART

### WCDMA DRX PATH

1. WCDMA COMMON DRX PATH

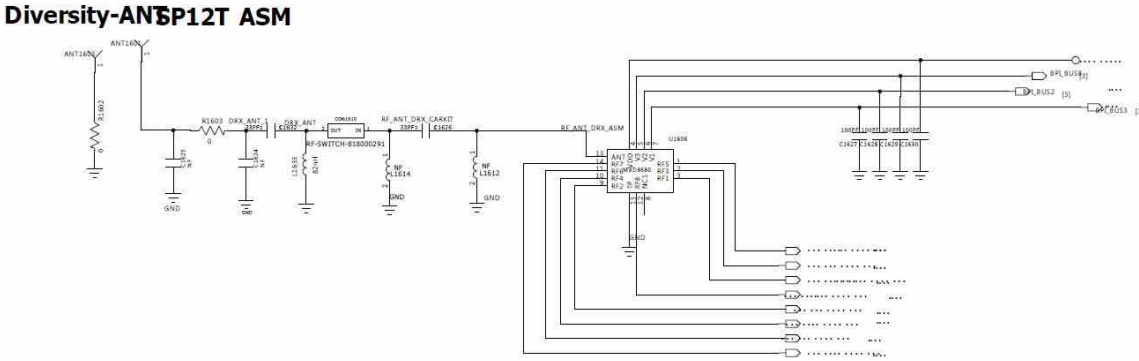




Copyright © 2019 LG Electronics. Inc. All right reserved.
Only training and service purposes

### 3.5.3 LTE PART

**Checking RF Signal TX path(LTE_B3)**

**Checking Flow**

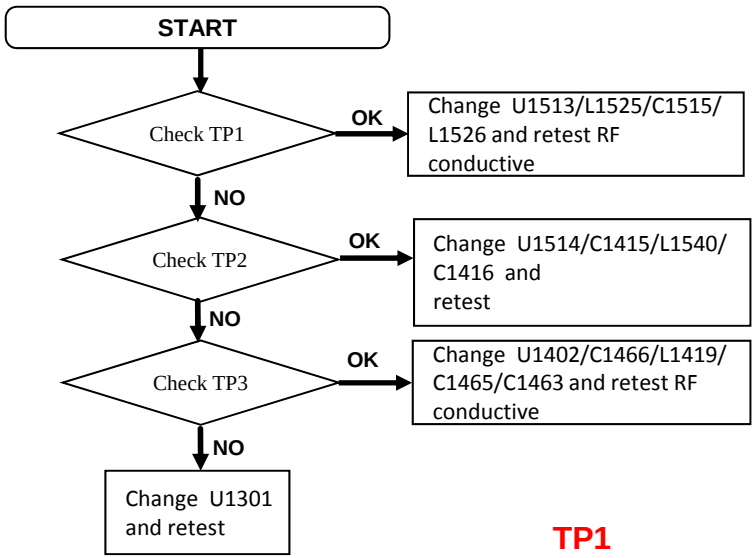


**Main bot**

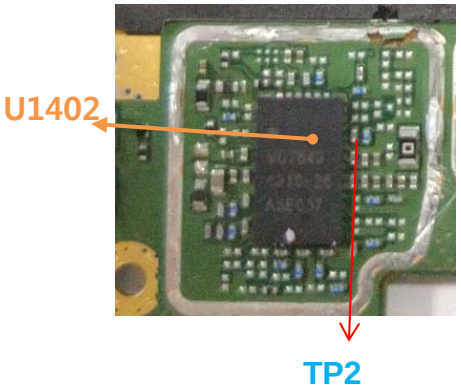


**Image**

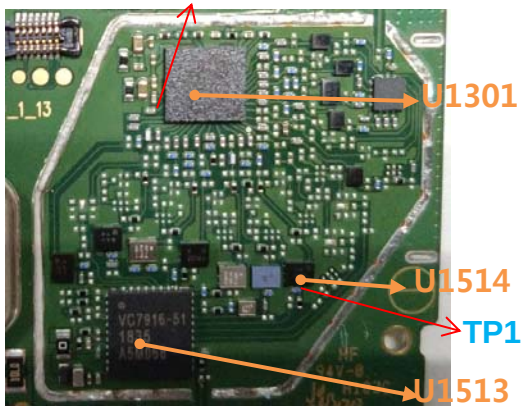


**Circuit Diagram**

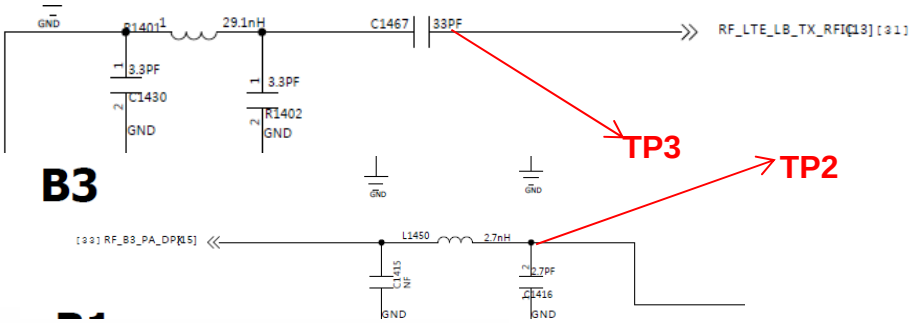


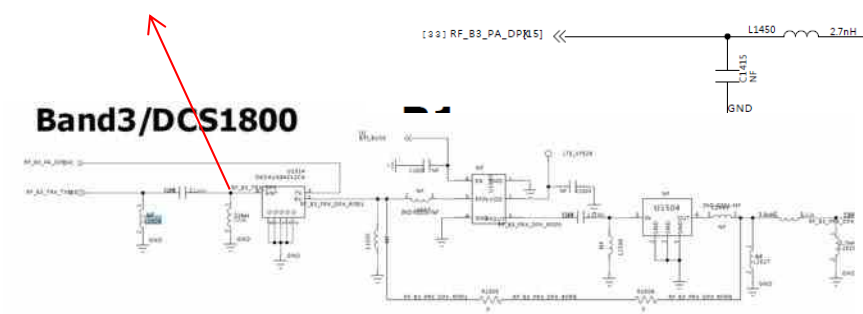




Copyright © 2019 LG Electronics. Inc. All right reserved.
Only training and service purposes

### 3.5.3 LTE RF PART

**LTE RF Part (B3)---PRX,The same as RF Signal RX path(GSM1800)**

| Checking Flow | Image |
| --- | --- |


Copyright ⓒ 2019 LG Electronics. Inc. All right reserved.
Only training and service purposes

### 3.5.3 LTE RF PART

**LTE RF Part (B3)---DRX**

**Checking Flow**

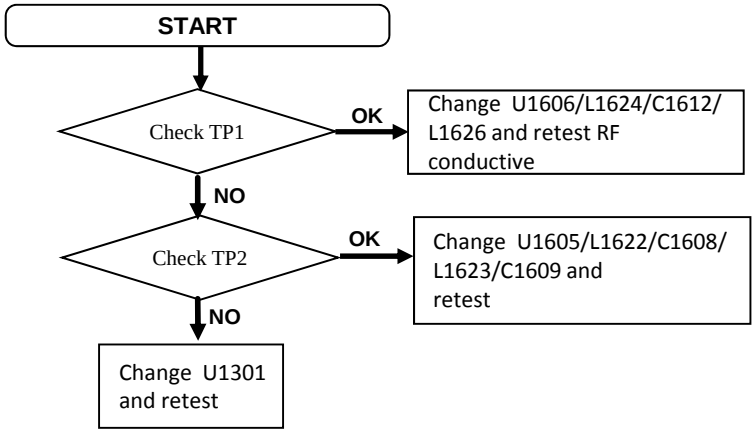


**Image**

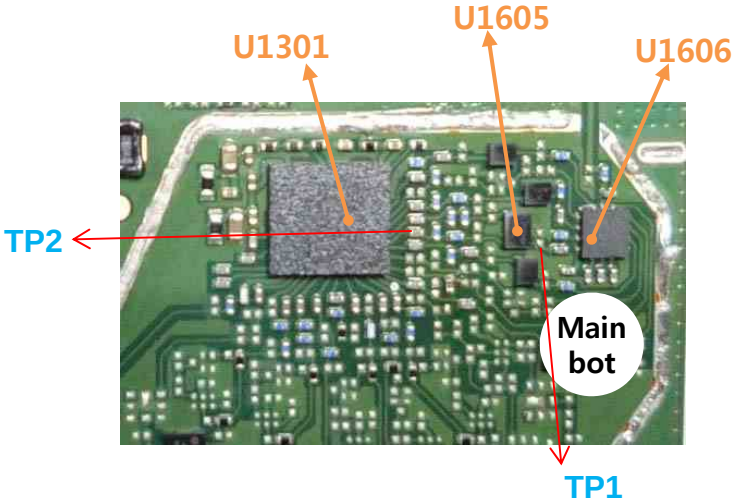


**Circuit Diagram**

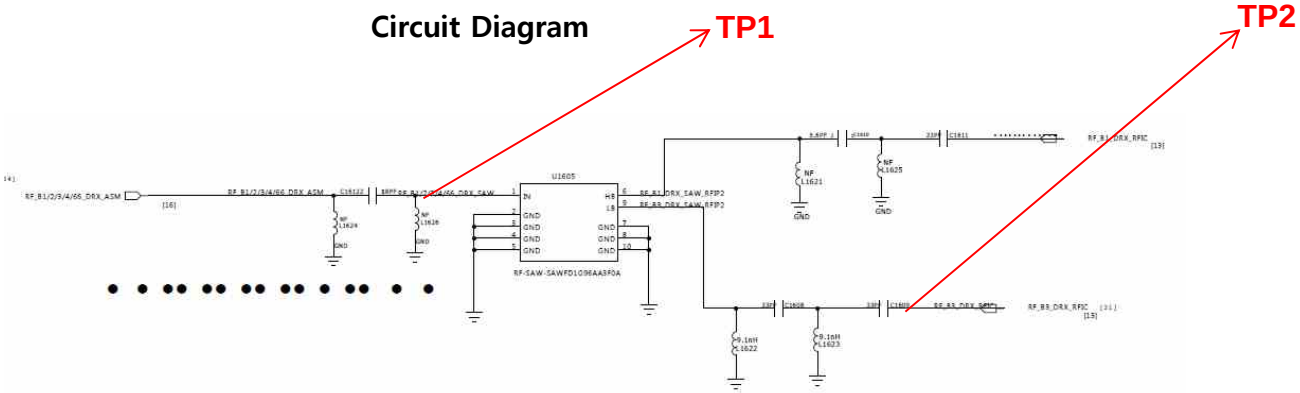




Copyright © 2019 LG Electronics. Inc. All right reserved.
Only training and service purposes

### 3.5.3 LTE PART

### Checking RF Signal TX path(LTE_B7)

**Checking Flow**

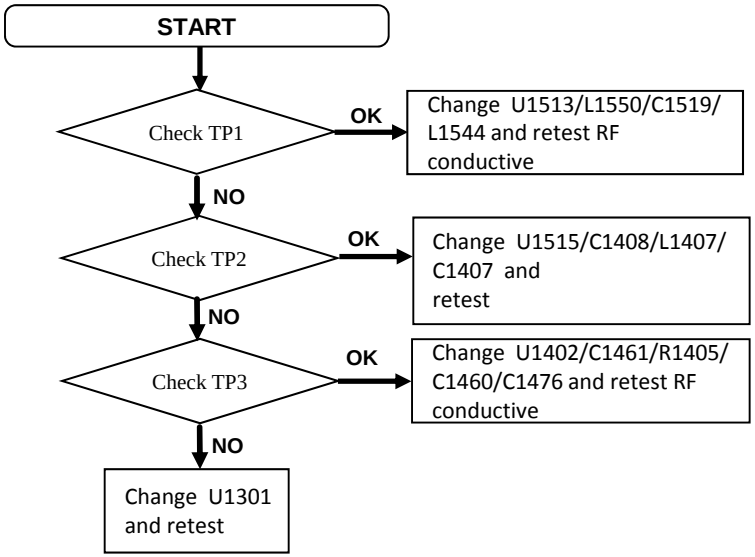


**Main bot**

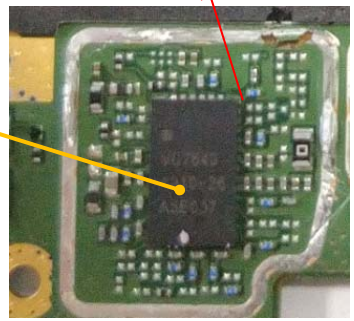


**Image**

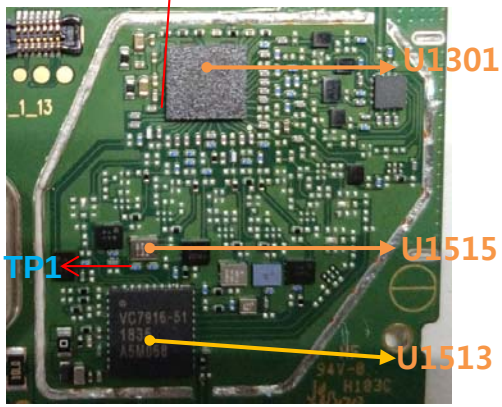


**Circuit Diagram**

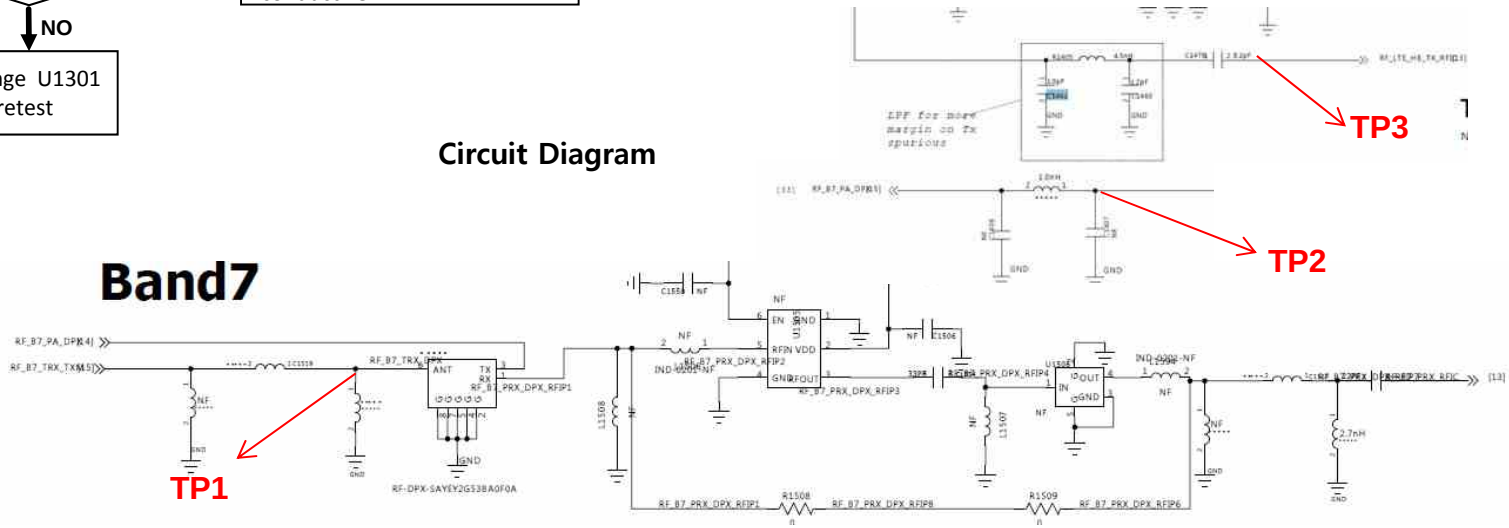




Copyright © 2019 LG Electronics. Inc. All right reserved.
Only training and service purposes

### 3.5.3 LTE RF PART

### LTE RF Part (B7)---PRX

**Checking Flow**

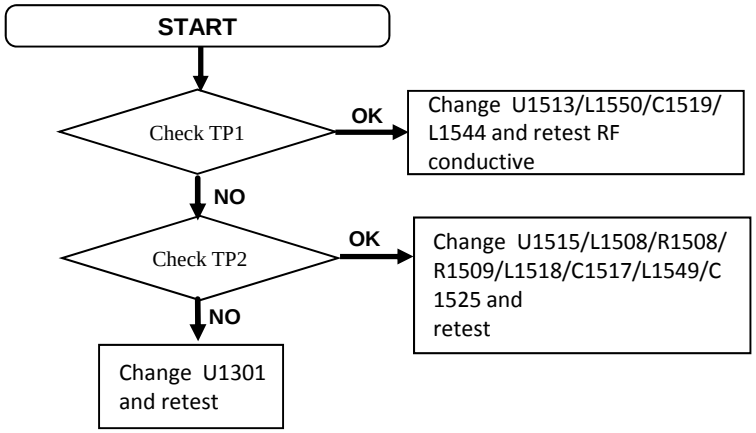


**Image**

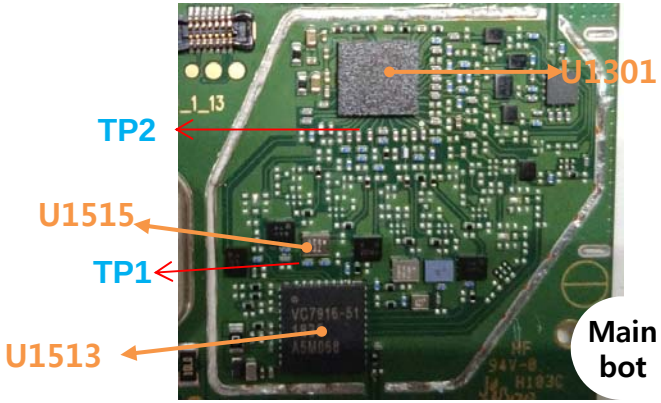


**Circuit Diagram**

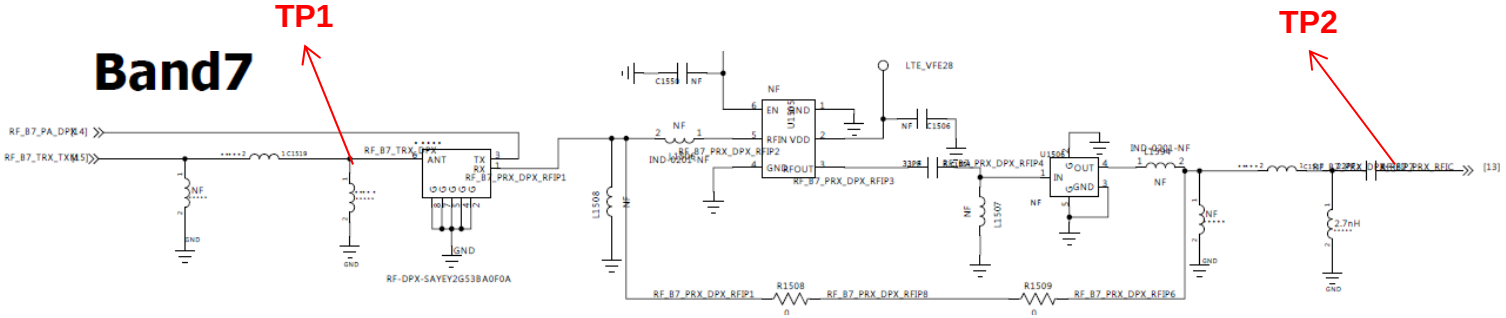




Copyright © 2019 LG Electronics. Inc. All right reserved.
Only training and service purposes

### 3.5.3 LTE RF PART

### LTE RF Part (B7)---DRX

**Checking Flow**

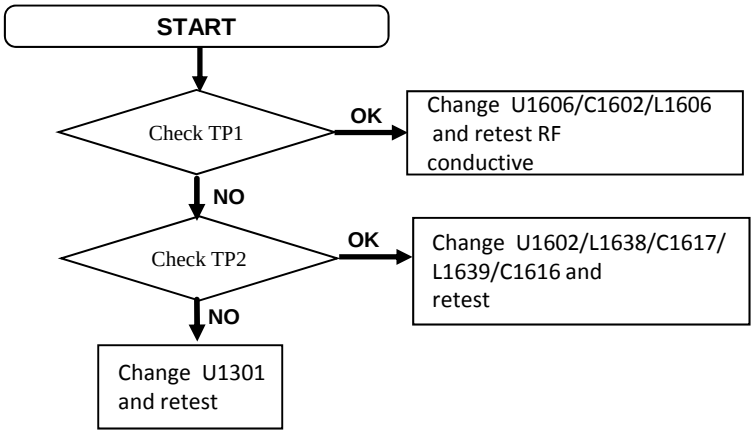


**Image**

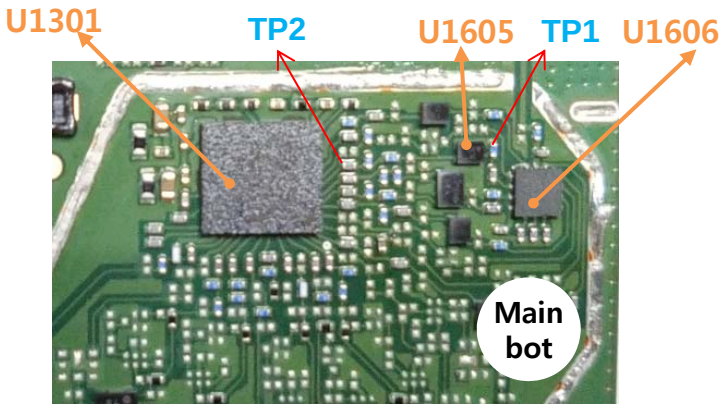


**Circuit Diagram**

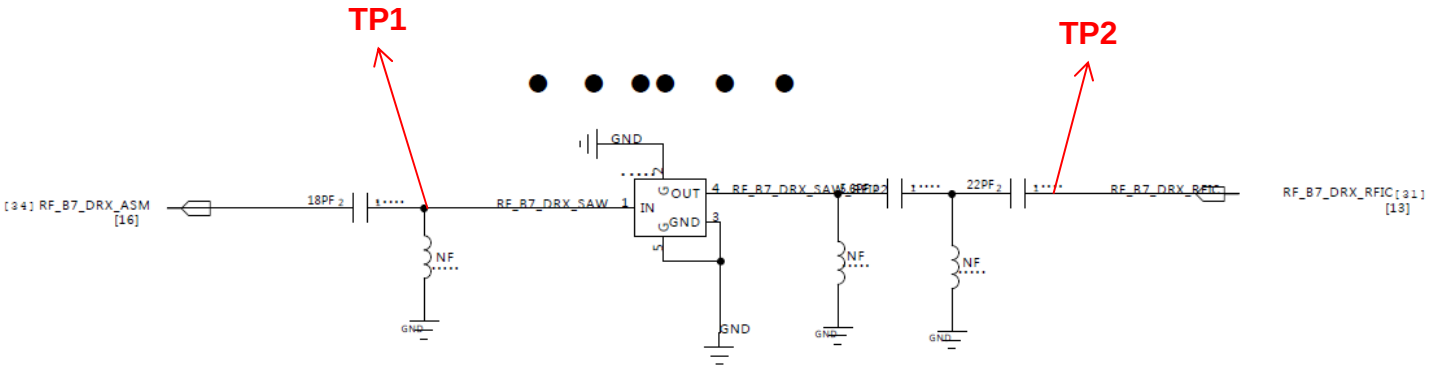




Copyright © 2019 LG Electronics. Inc. All right reserved.
Only training and service purposes

### 3.5.3 LTE RF PART

#### LTE RF Part (B17)--- TX

**Checking Flow**

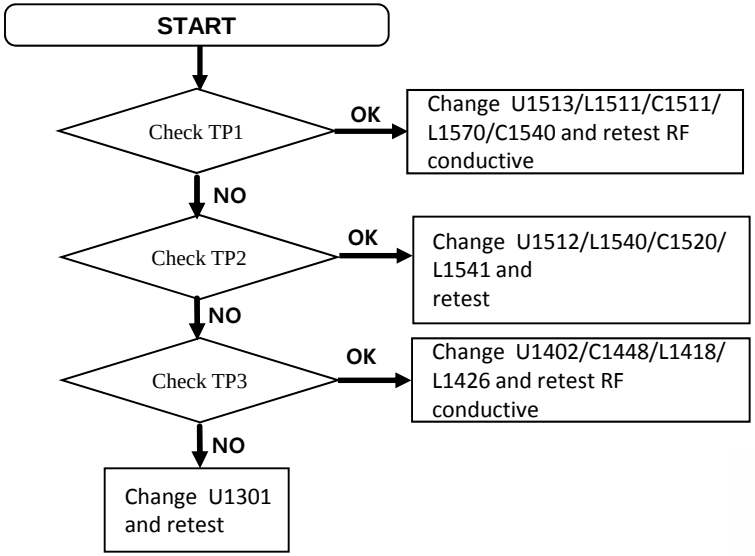


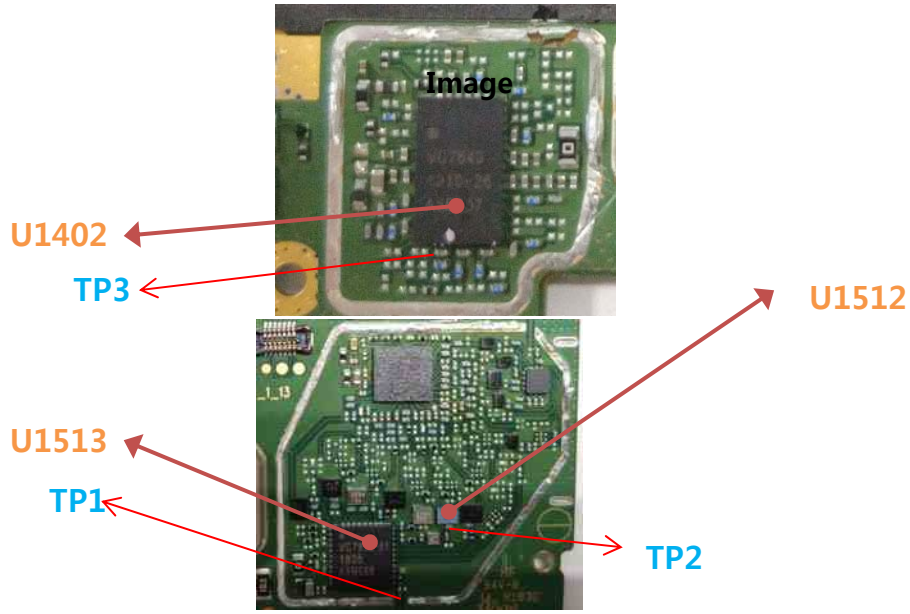


**Circuit Diagram**

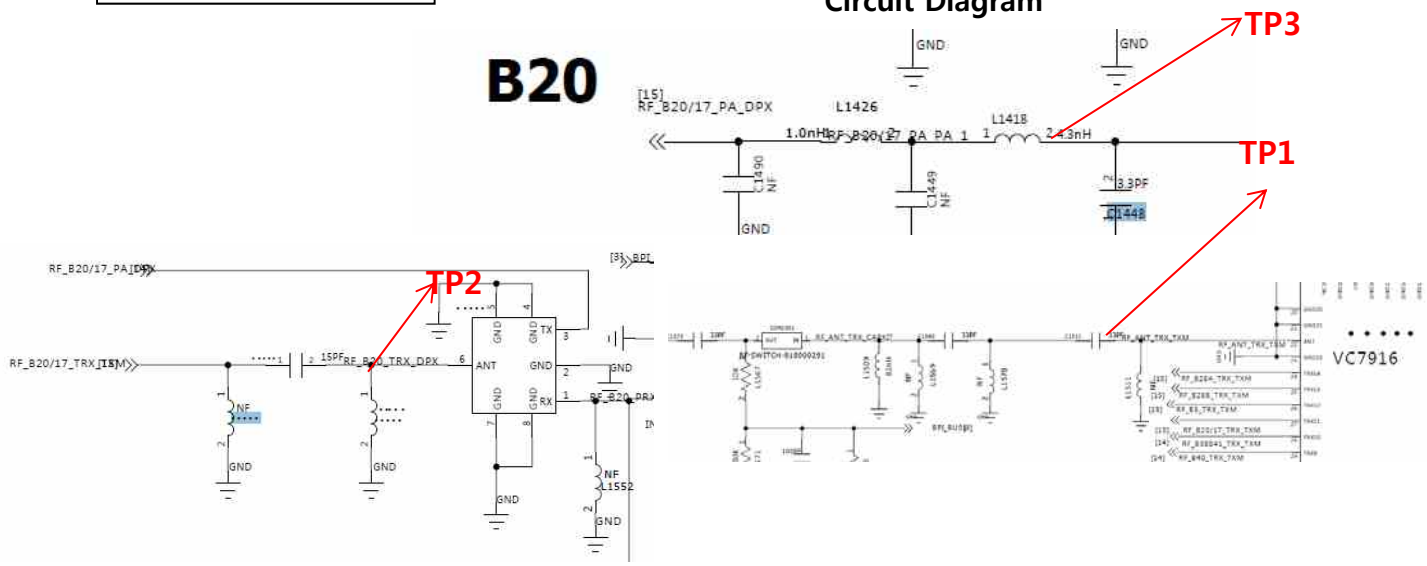




Copyright © 2019 LG Electronics. Inc. All right reserved.
Only training and service purposes

### 3.5.3 LTE RF PART

**LTE RF Part (B17)---PRX**

**Checking Flow**

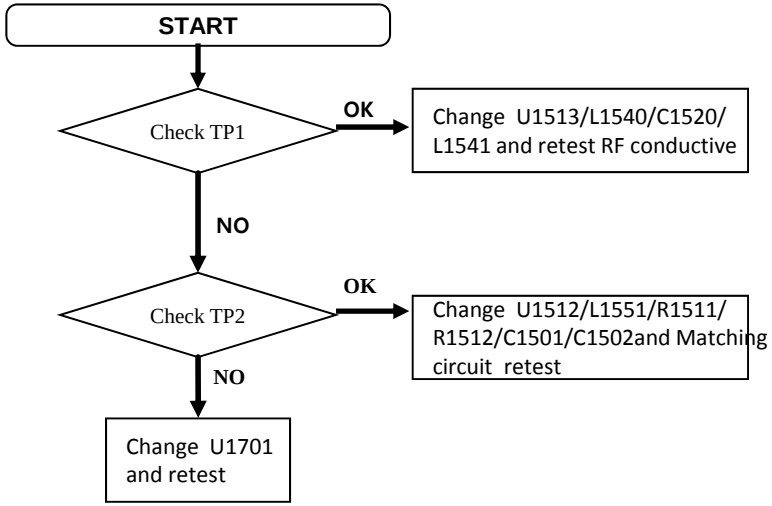


**Image**

Main Bot

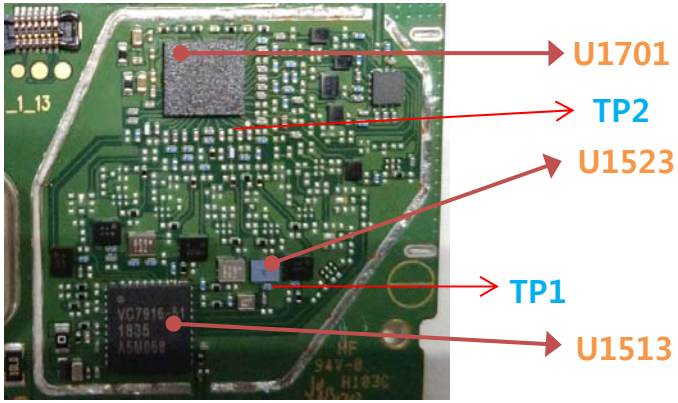


**Circuit Diagram**

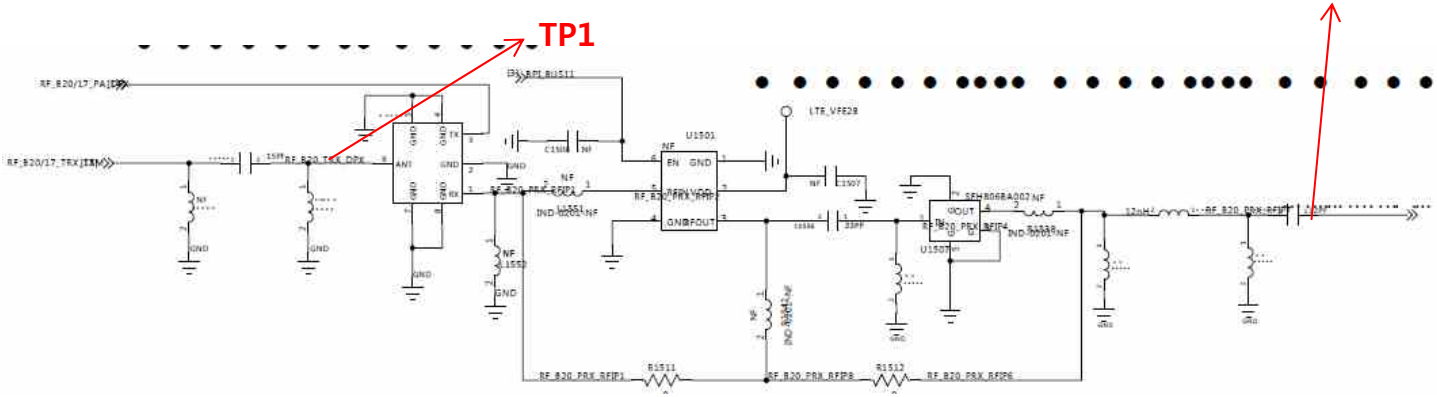




Copyright © 2019 LG Electronics. Inc. All right reserved.
Only training and service purposes

### 3.5.3 LTE RF PART

**LTE RF Part (B17)---DRX**

**Checking Flow**

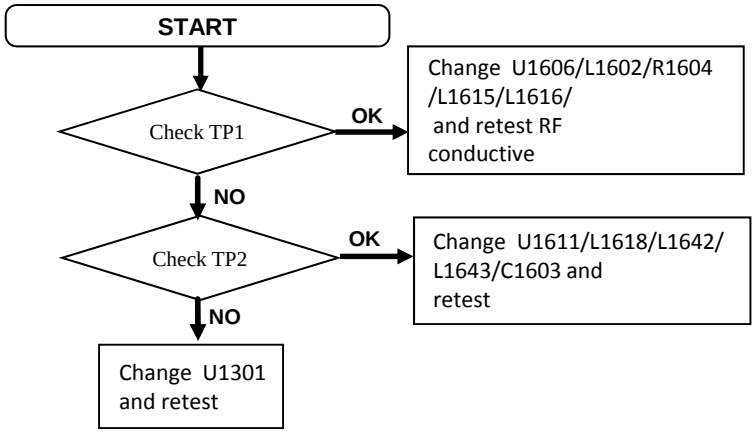


**Image**

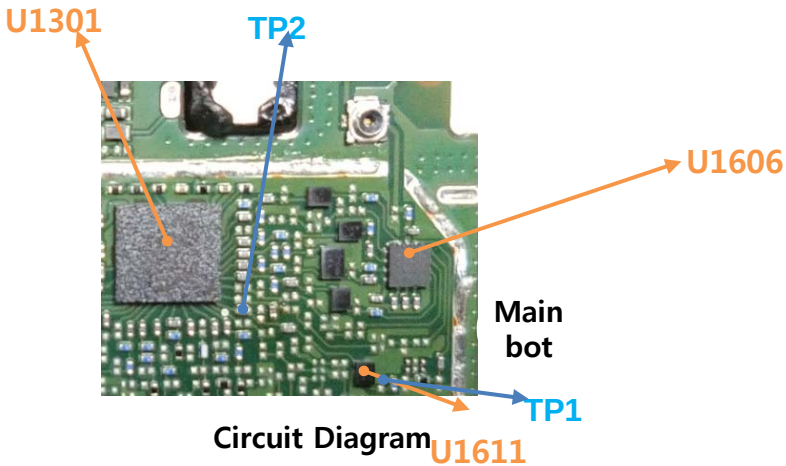


**Circuit Diagram**

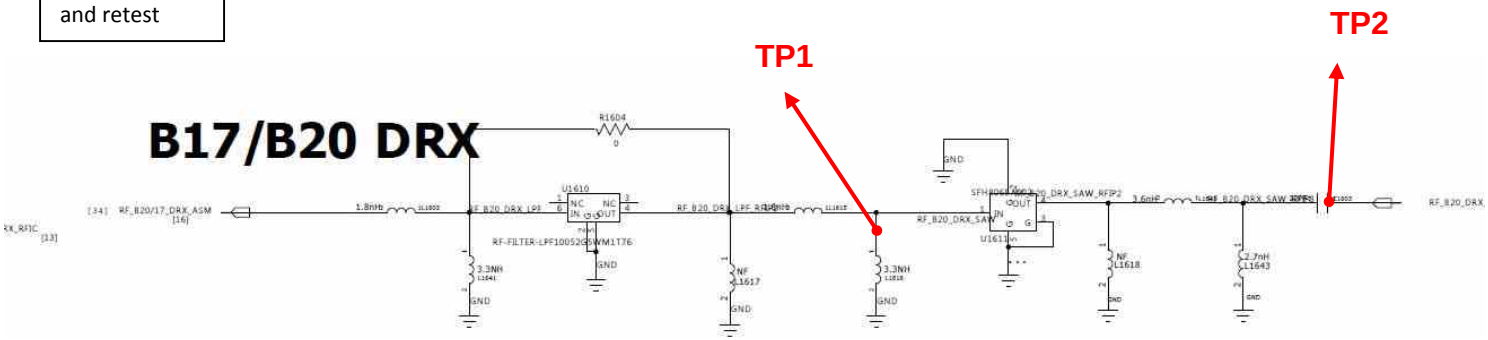




Copyright © 2019 LG Electronics. Inc. All right reserved.
Only training and service purposes

### 3.5.3 LTE RF PART

**Checking RF Signal TX path(LTE_B28A)**

**Checking Flow**

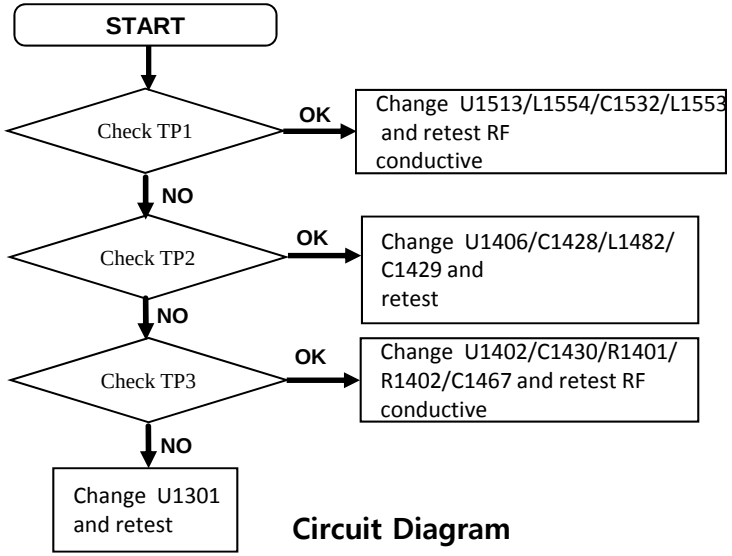


**Main bot**

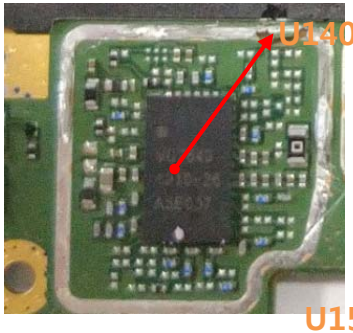


**Image**

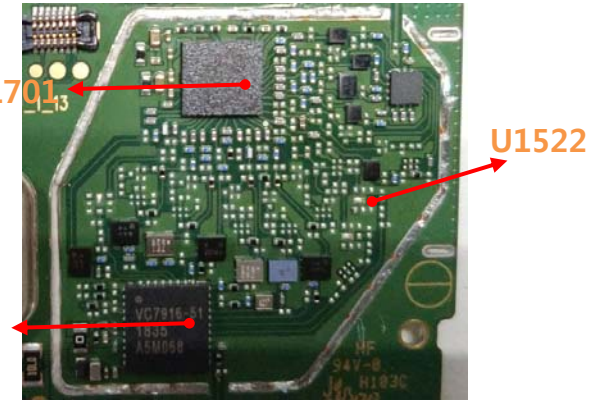


**Circuit Diagram**

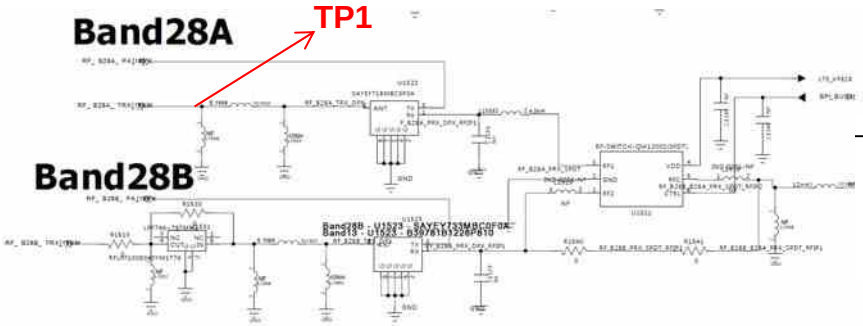


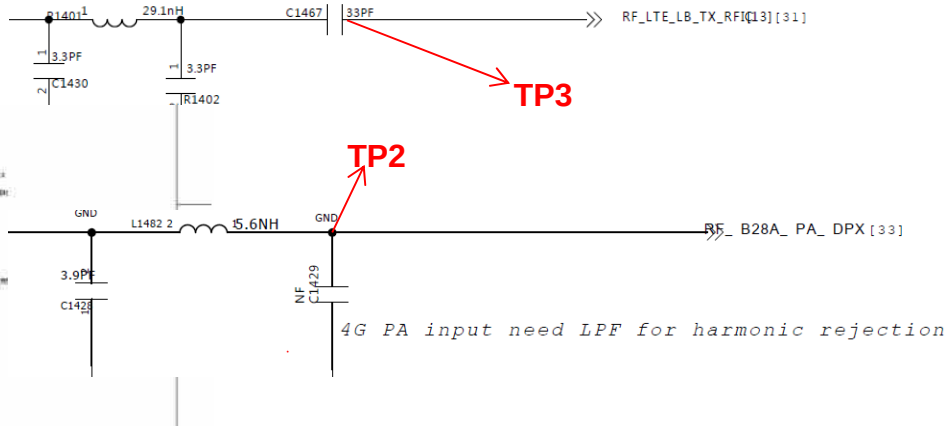




Copyright © 2019 LG Electronics. Inc. All right reserved.
Only training and service purposes

### 3.5.3 LTE RF PART

**Checking RF Signal PRX path(LTE_B28A)**

**Checking Flow**

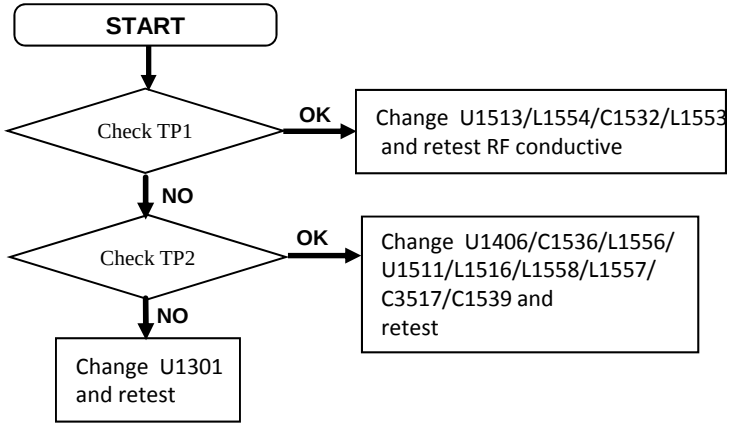


**Main bot**

**Image**

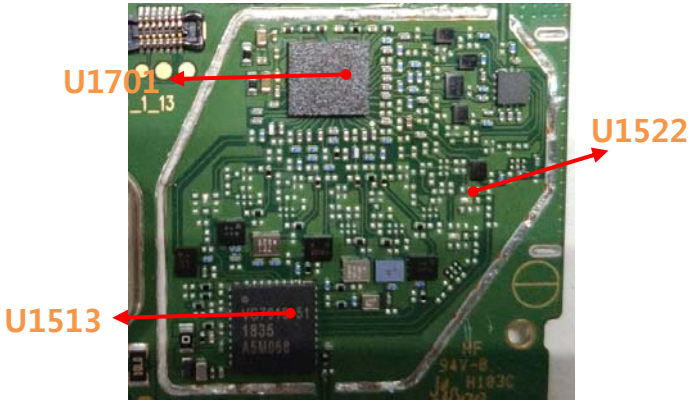


**Circuit Diagram**

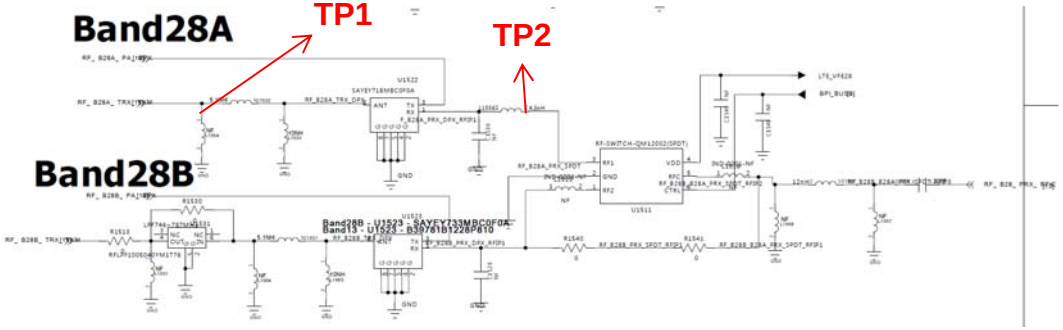




Copyright © 2019 LG Electronics. Inc. All right reserved.
Only training and service purposes

### 3.5.3 LTE RF PART

**LTE RF Part (B28)---DRX**

**Checking Flow**

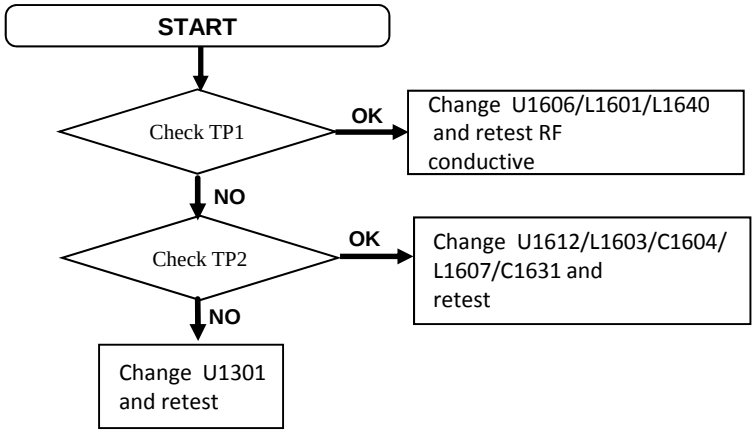


**Image**

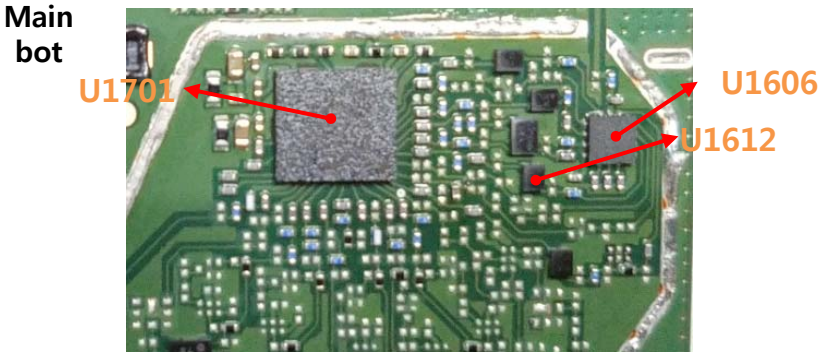


**Circuit Diagram**

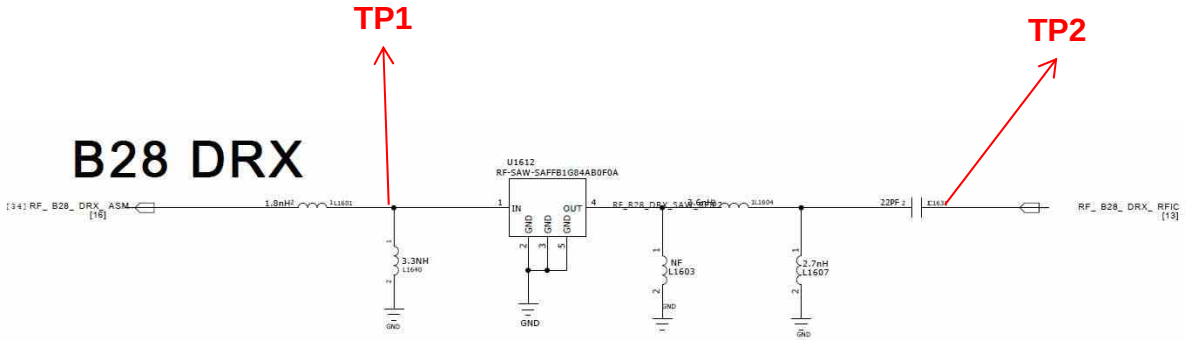




Copyright © 2019 LG Electronics. Inc. All right reserved.
Only training and service purposes

### 3.5.3 LTE RF PART

**Checking RF Signal TX path(LTE_B28B)**

**Checking Flow**

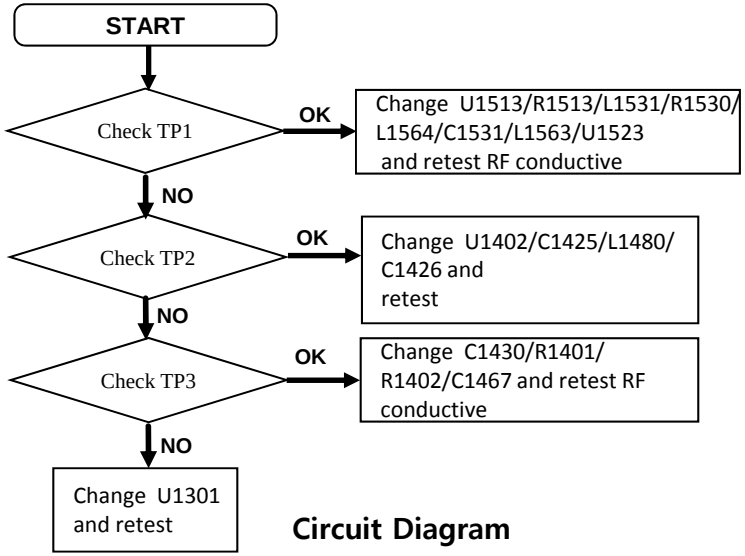


**Main bot**

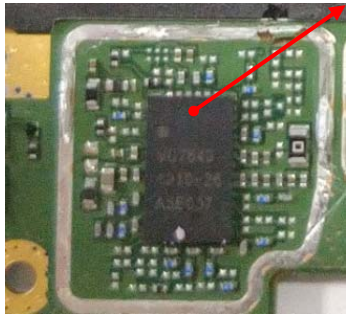


**Image**

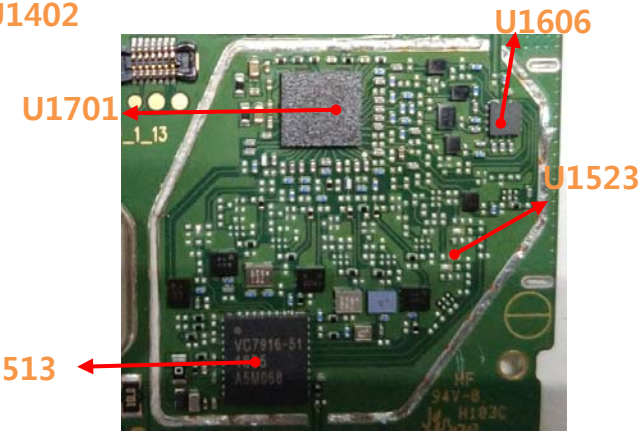


**Circuit Diagram**

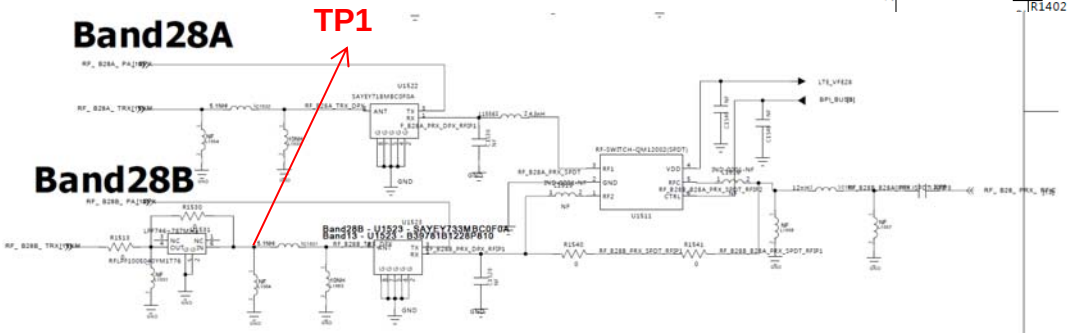


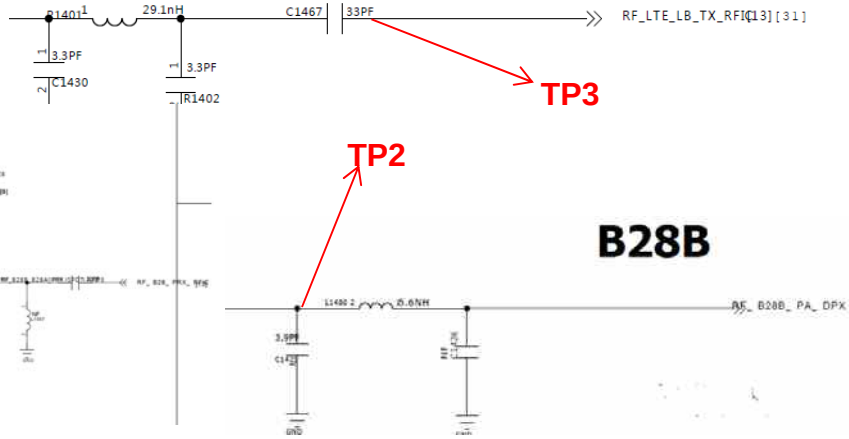




Copyright © 2019 LG Electronics. Inc. All right reserved.
Only training and service purposes

### 3.5.3 LTE RF PART

**Checking RF Signal PRX path(LTE_B28B)**

**Checking Flow**

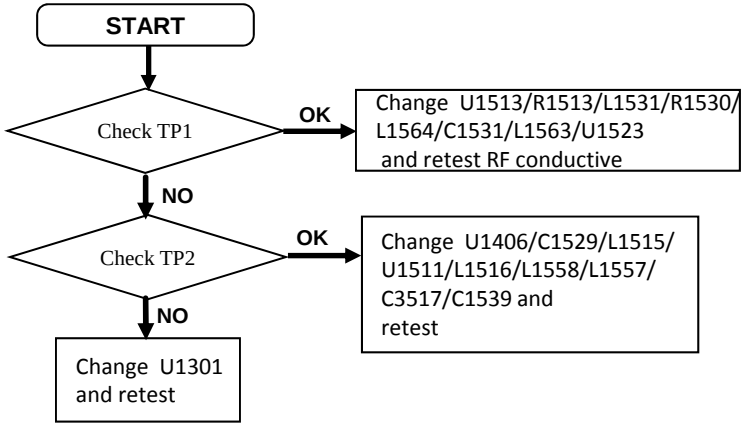


**Main bot**

**Image**

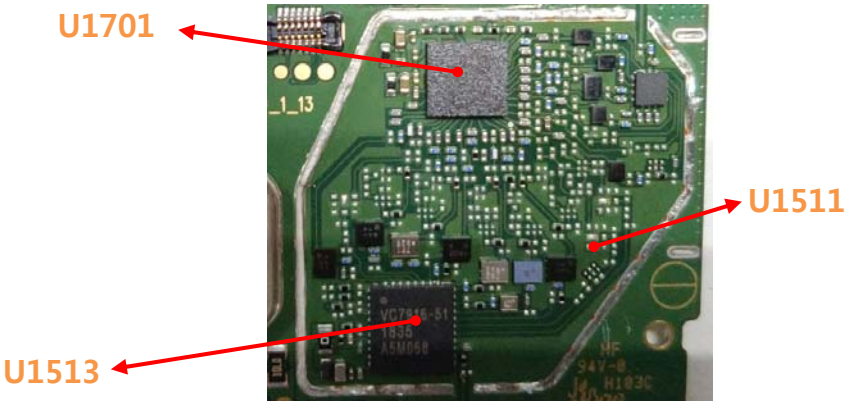


**Circuit Diagram**

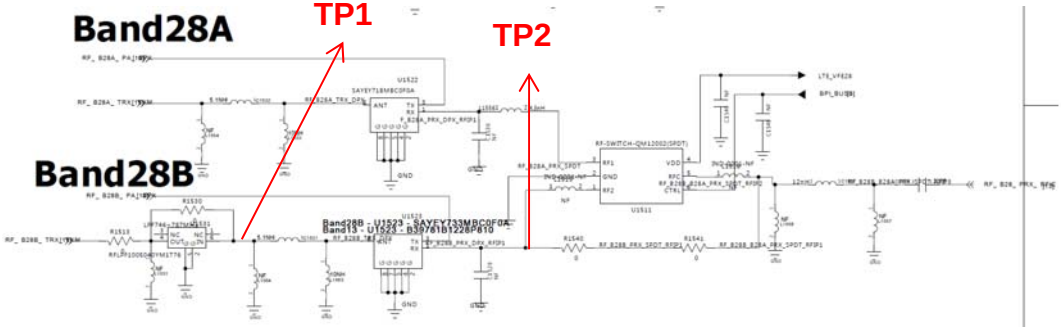




Copyright © 2019 LG Electronics. Inc. All right reserved.
Only training and service purposes

### 3.5.3 LTE RF PART

**LTE RF Part (B28)---DRX**

**Checking Flow**

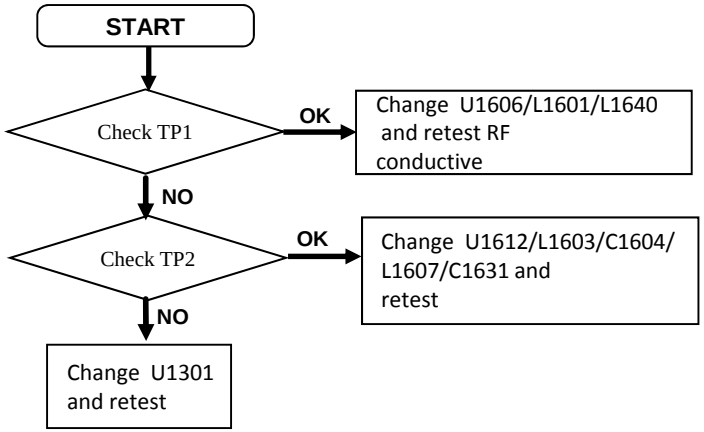


**Image**

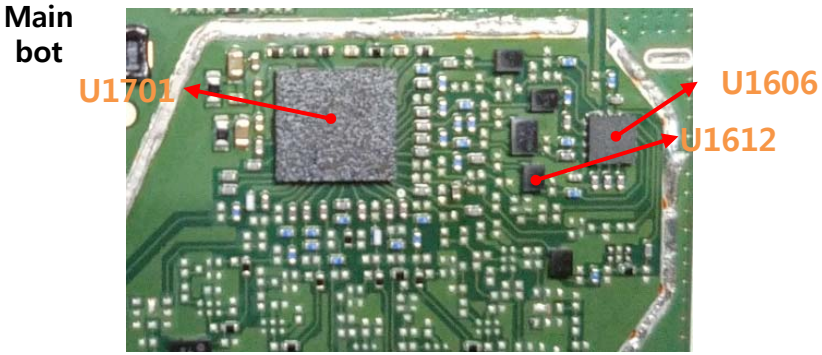


**Circuit Diagram**

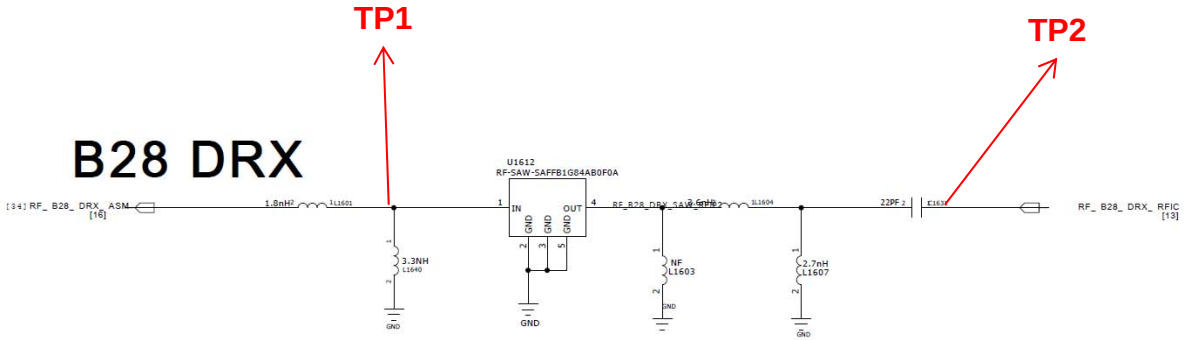




Copyright © 2019 LG Electronics. Inc. All right reserved.
Only training and service purposes

### 3.5.3 LTE PART

**Checking RF Signal TX path(WCDMA/LTE_B4)**

**Checking Flow**

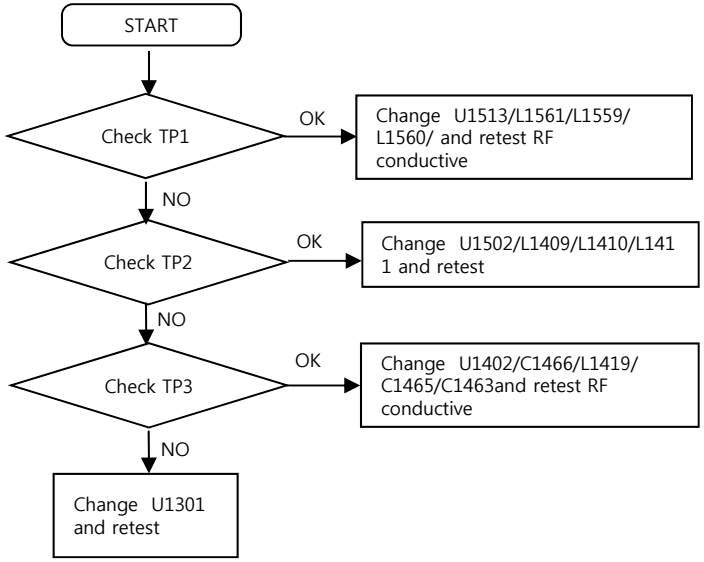


**Image**

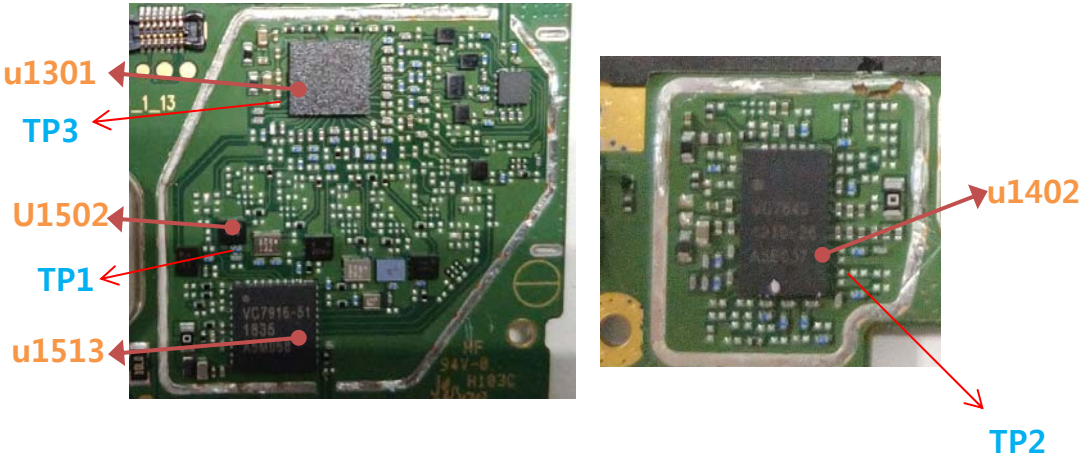


**Circuit Diagram**

**B4/B66**

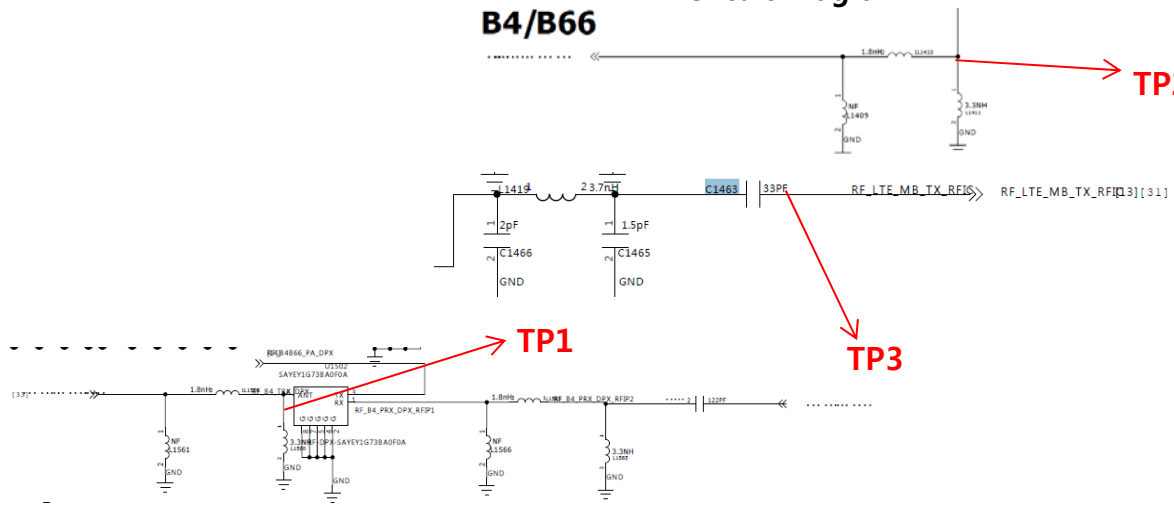




Copyright © 2019 LG Electronics. Inc. All right reserved.
Only training and service purposes

### 3.5.3 LTE PART

### Checking RF Signal PRX path(WCDMA/LTE_B4)

#### Checking Flow

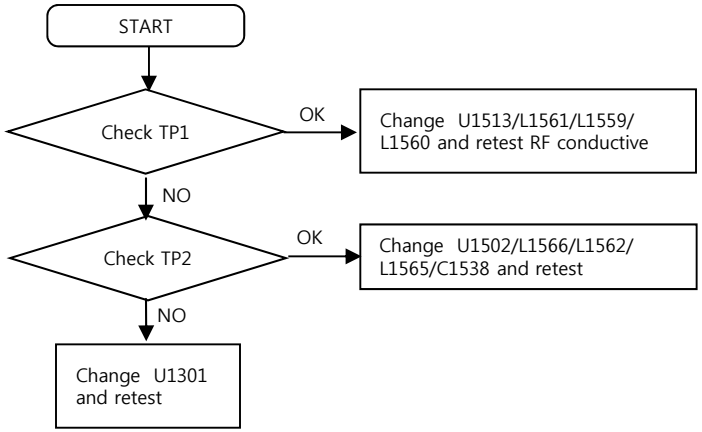


#### Image

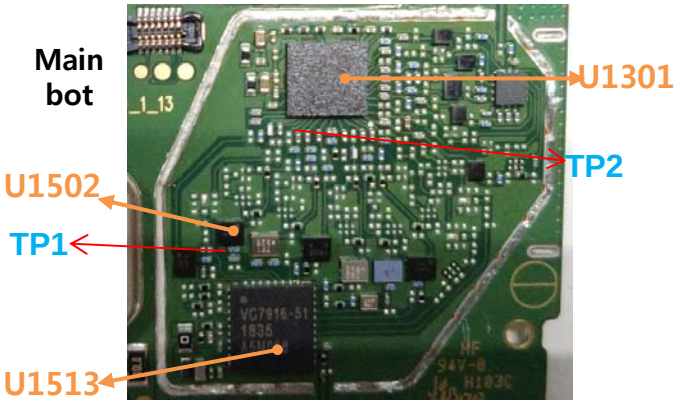


#### Circuit Diagram

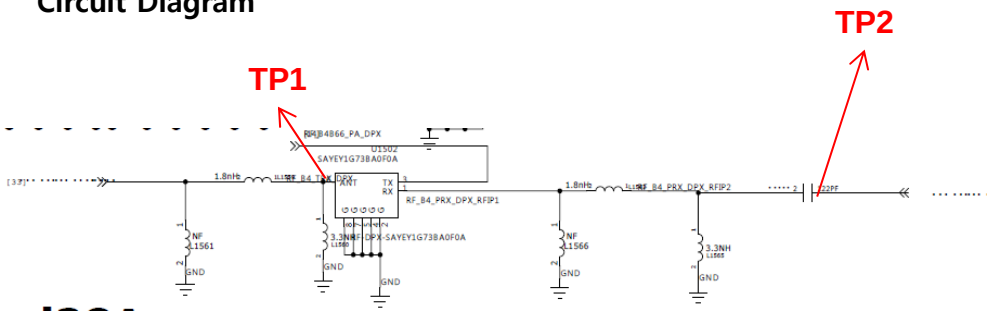




Copyright © 2019 LG Electronics. Inc. All right reserved.
Only training and service purposes

### 3..5.3 LTE PART

**Checking RF Signal DRX path(WCDMA/LTE_B1/4/66)**

**Checking Flow**

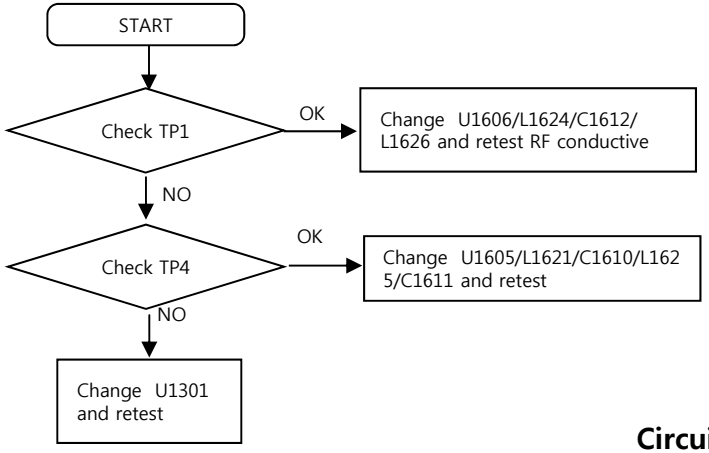


**Image**

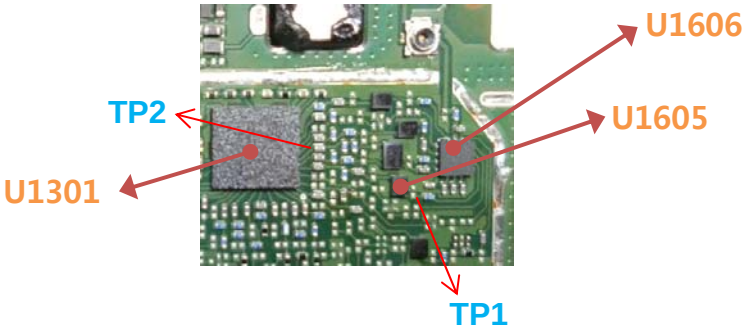


**Circuit Diagram**

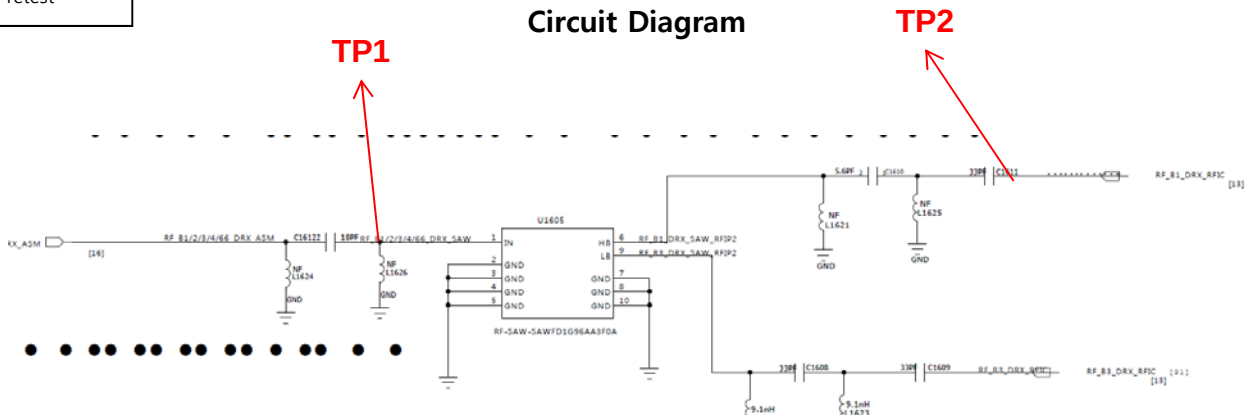




Copyright © 2019 LG Electronics. Inc. All right reserved.
Only training and service purposes

## Checking Power signal (Battery connector, Power Key, PMIC Regulator)

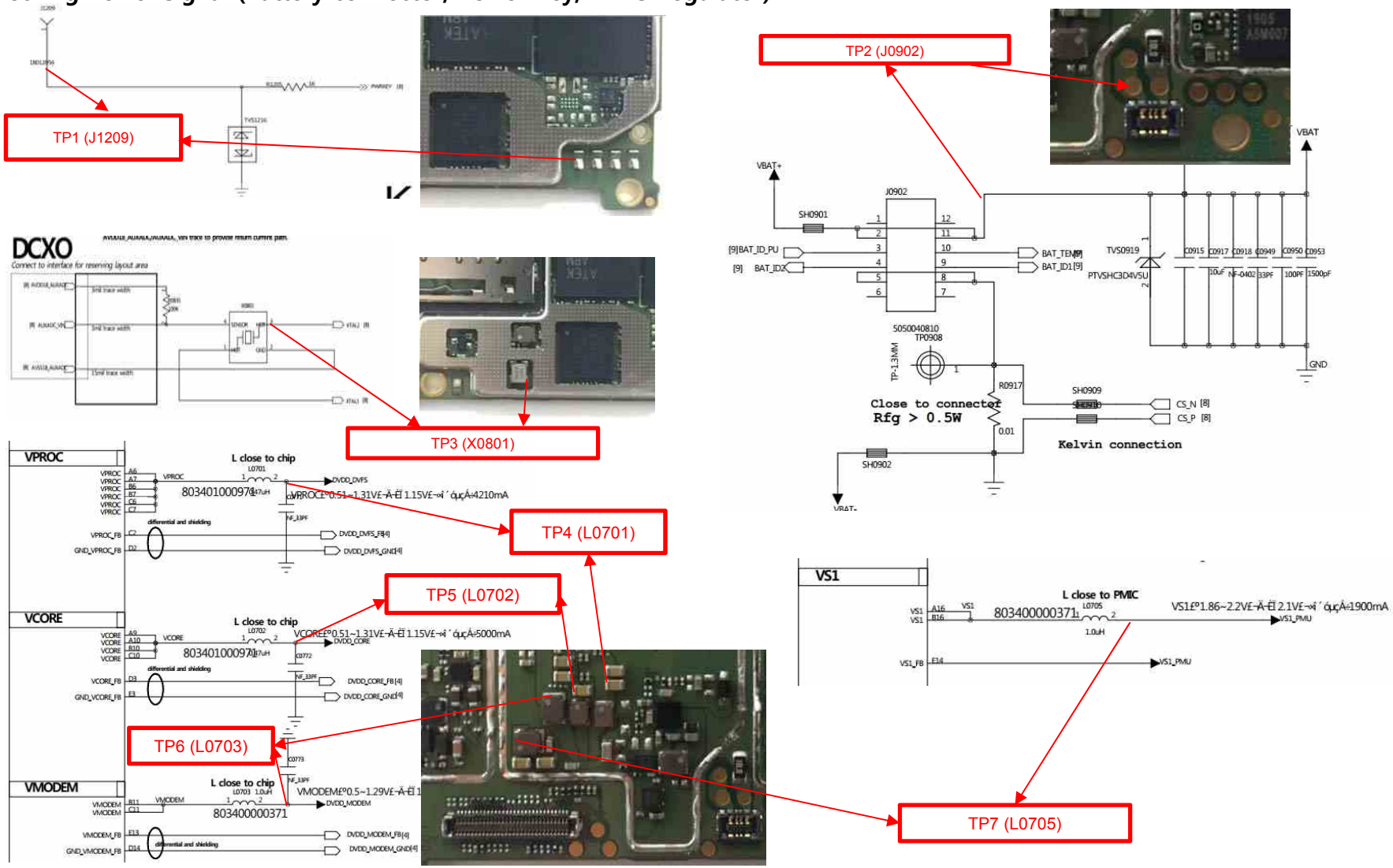




Copyright © 2019 LG Electronics. Inc. All right reserved.
Only training and service purposes

**The I/O connector and USB cable voltage(5.0V) is used as the reference one of PMIC for charging.**

**Checking Flow**

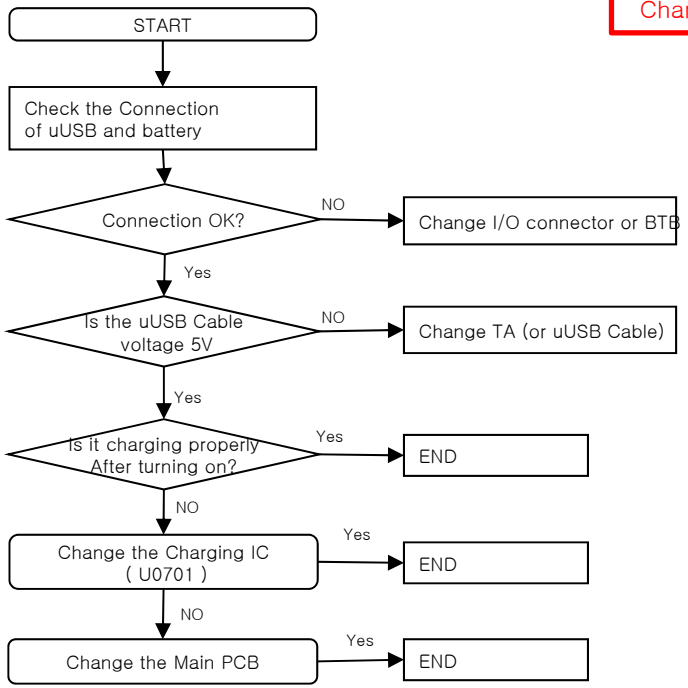


**Image**

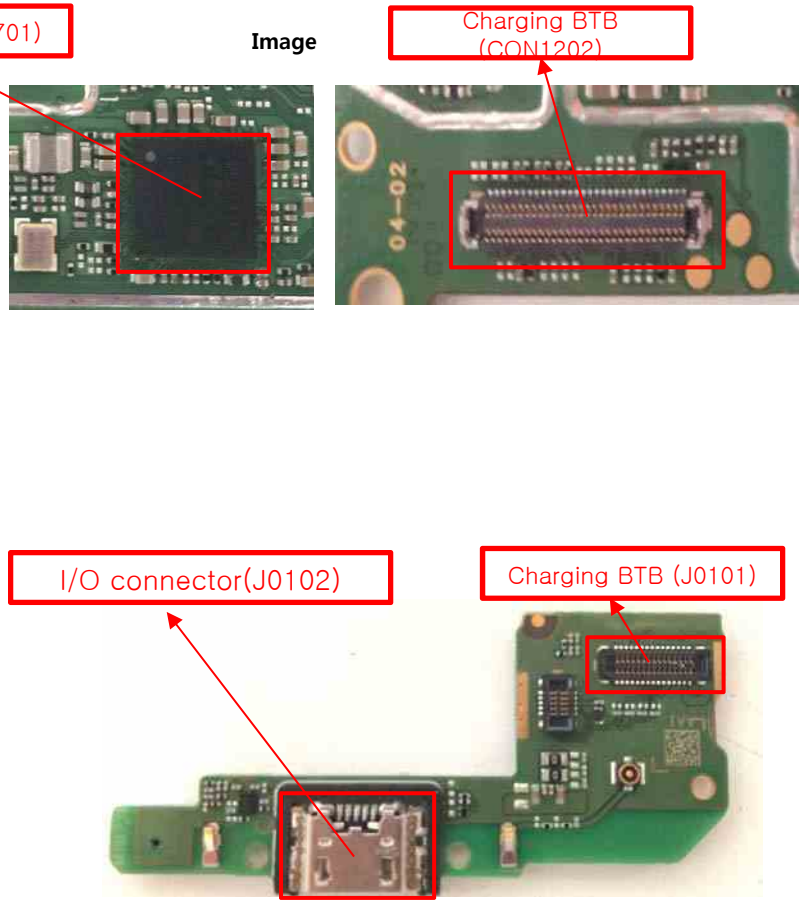




Copyright © 2019 LG Electronics. Inc. All right reserved.
Only training and service purposes

**The receiver control signal is generated by MT6357(U0701), the chipset and the receiver should be checked.**

## Checking Flow

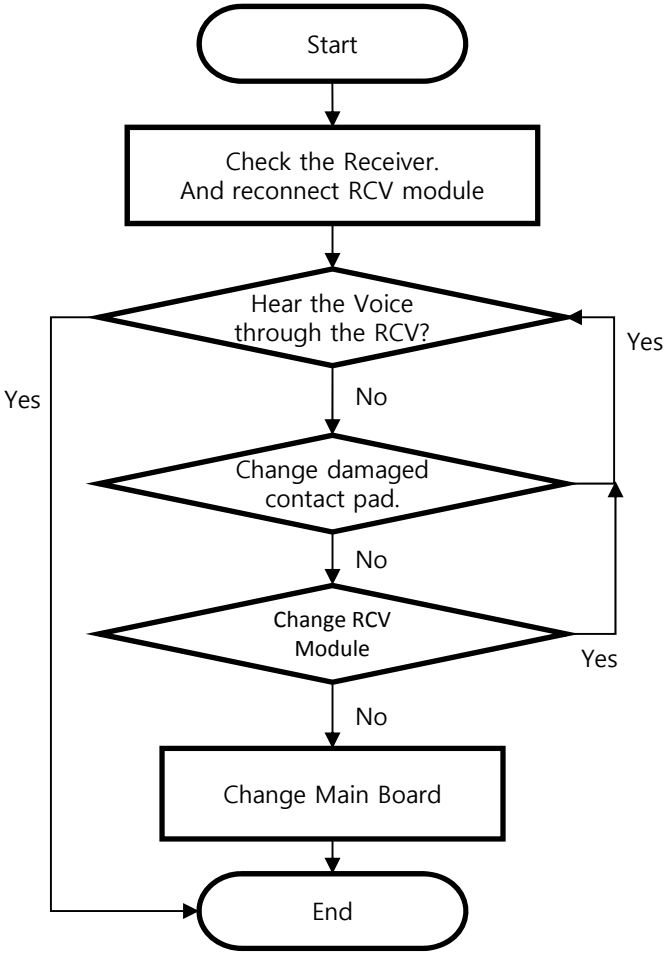


## Placement

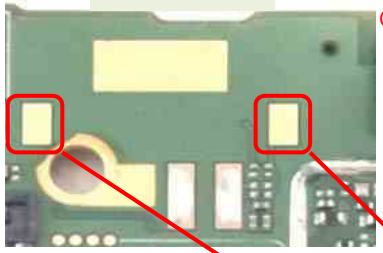


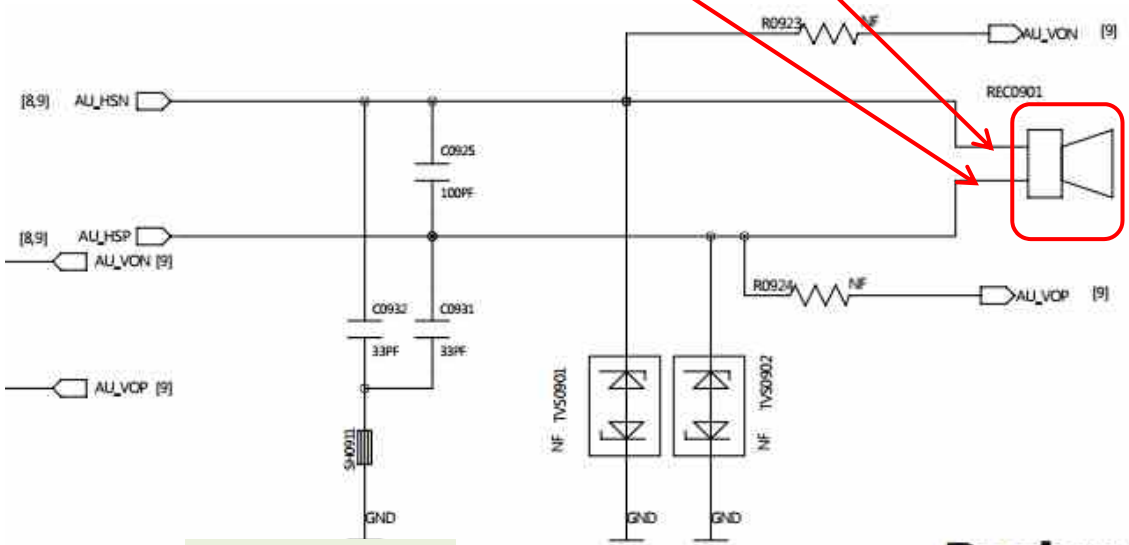


Circuit Diagram



Copyright © 2019 LG Electronics. Inc. All right reserved.
Only training and service purposes

**The speaker control signal is generated by MT6357(U0701), the chipset and the speaker should be checked.**

**Checking Flow**

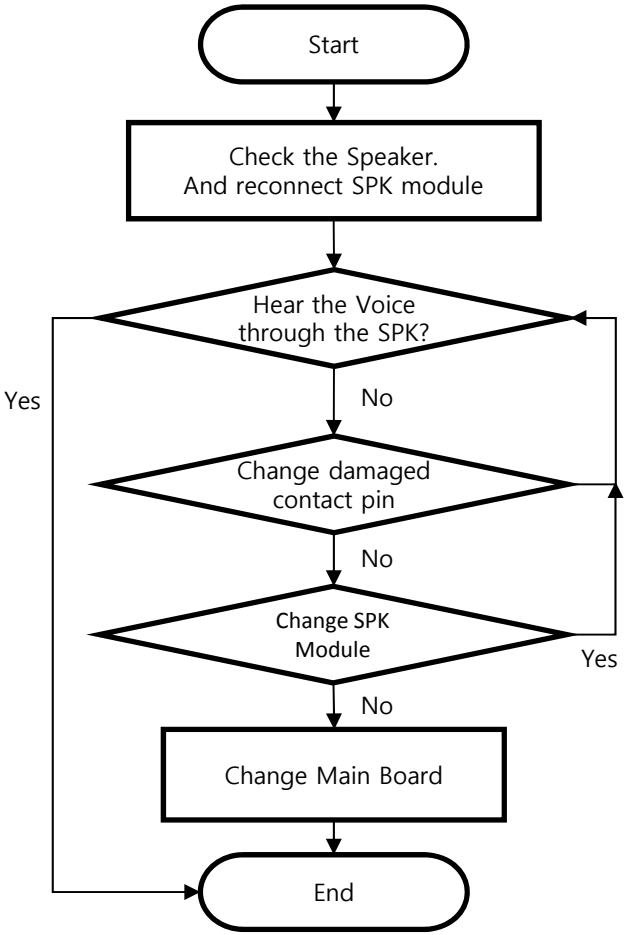


Contact pin
(J0104 J0105)

BOT

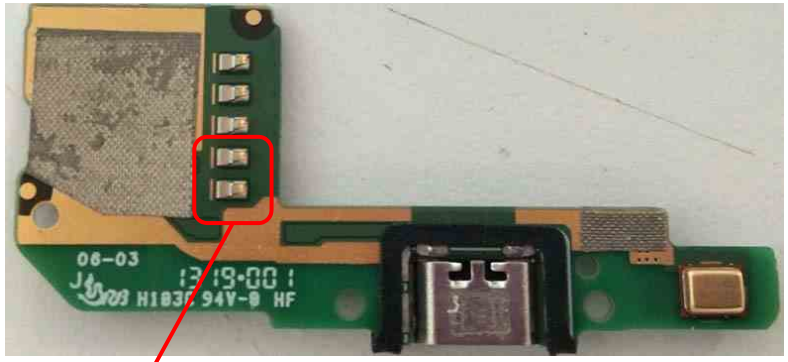

Placement

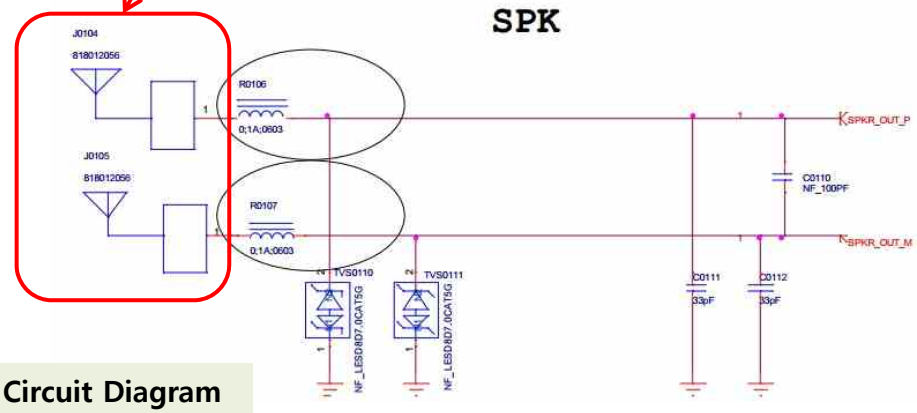


Circuit Diagram



Copyright © 2019 LG Electronics. Inc. All right reserved.
Only training and service purposes

**It's operating voice call(except speakerphone), voice recording, camcorder recording.**

**Checking Flow**

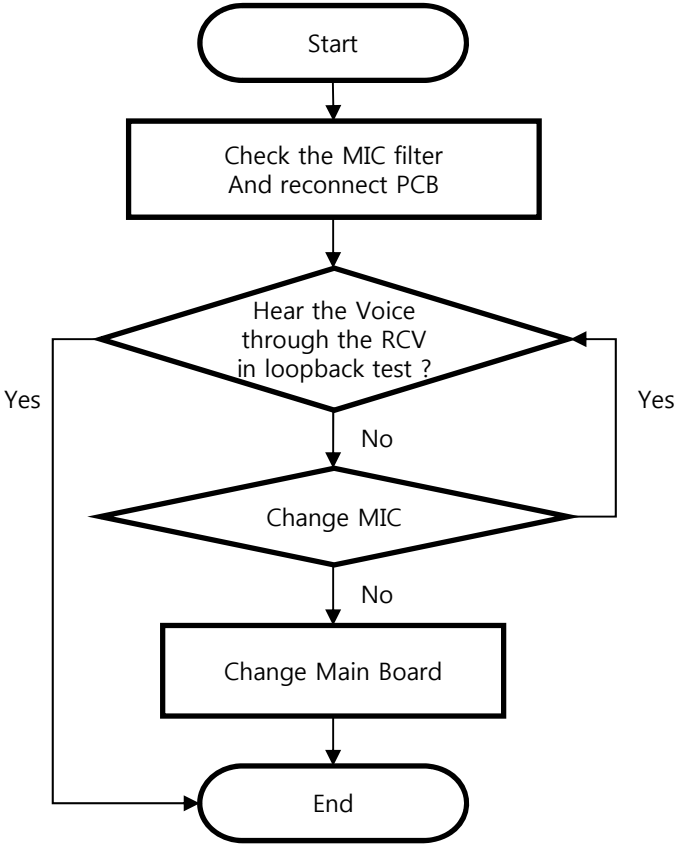


**Placement**

**BOT**

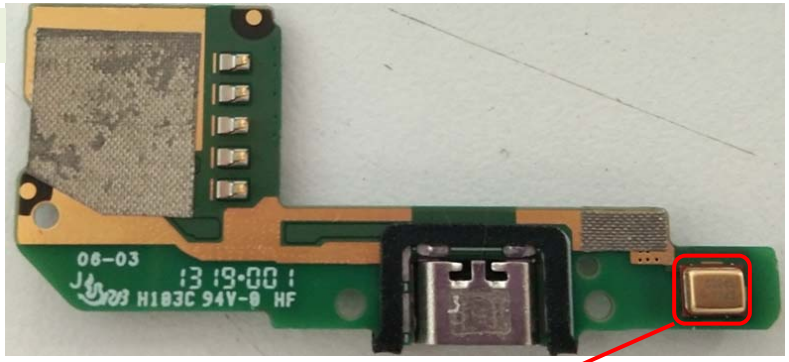


Main Mic
(U0101)

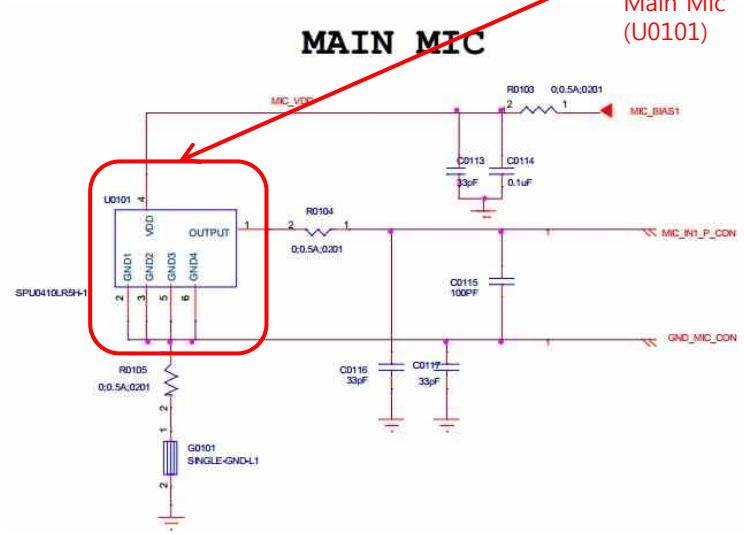


**Circuit Diagram**



Copyright © 2019 LG Electronics. Inc. All right reserved.
Only training and service purposes

**It's operating Speakerphone call.**

**Checking Flow**

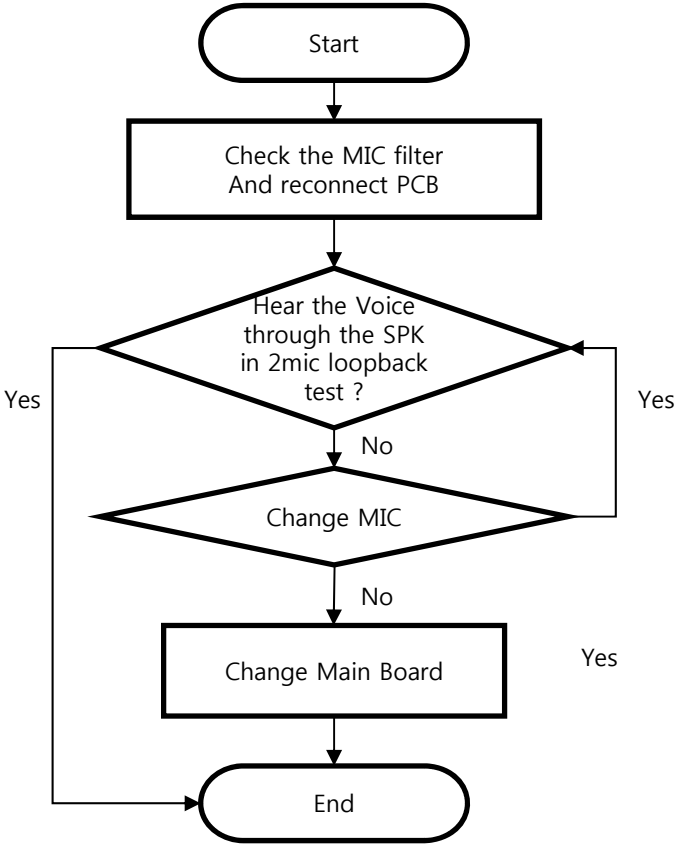


**Placement**

**BOT**

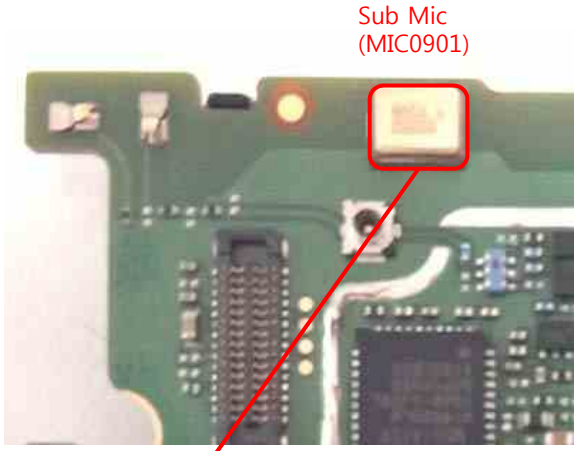


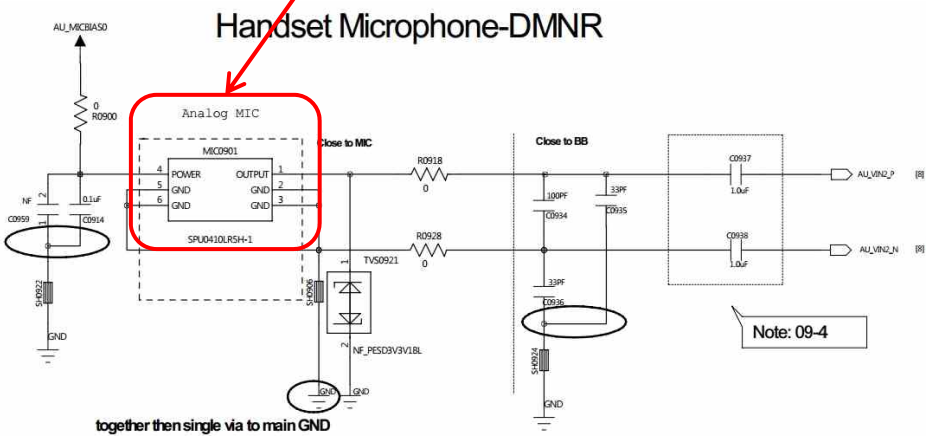


**Circuit Diagram**



Copyright © 2019 LG Electronics. Inc. All right reserved.
Only training and service purposes

**Disable detecting headset insert or No sound from Earphone, Check the Connector and Main PCB.**

**Checking Flow**

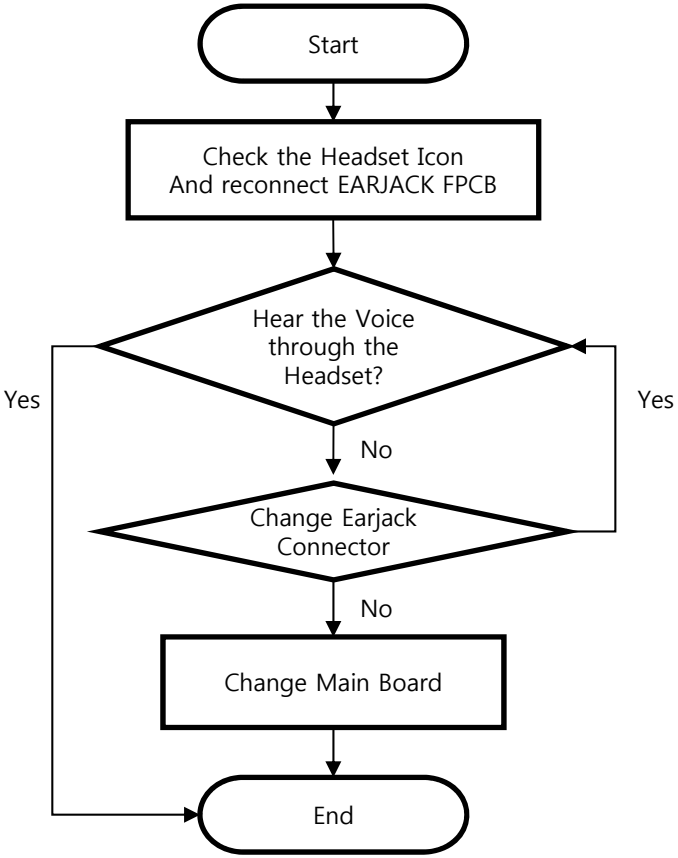


**Placement**

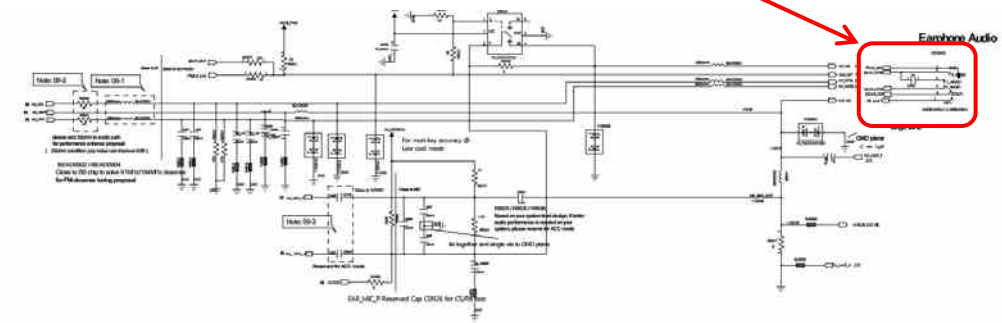


**Circuit Diagram**



Copyright © 2019 LG Electronics. Inc. All right reserved.
Only training and service purposes

**It's operating FM Radio.**

**Checking Flow**

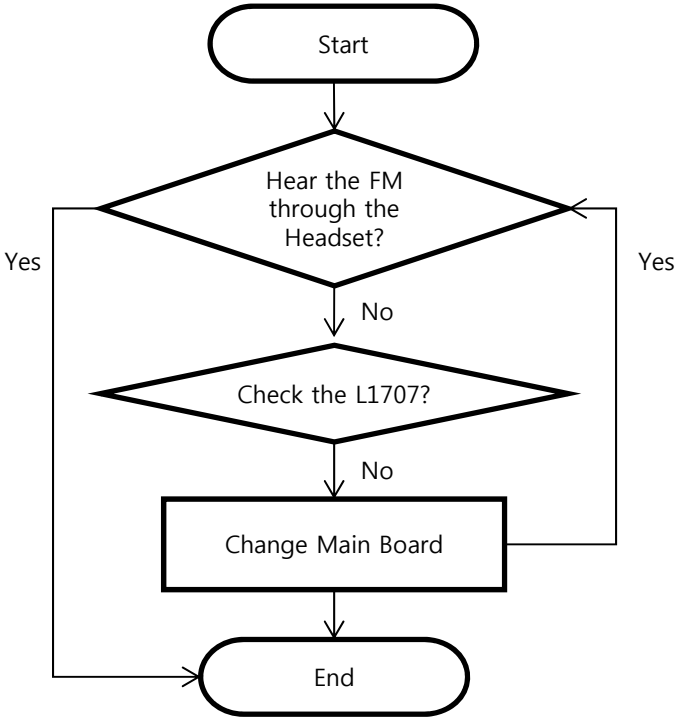


**Placement**

**BOT**

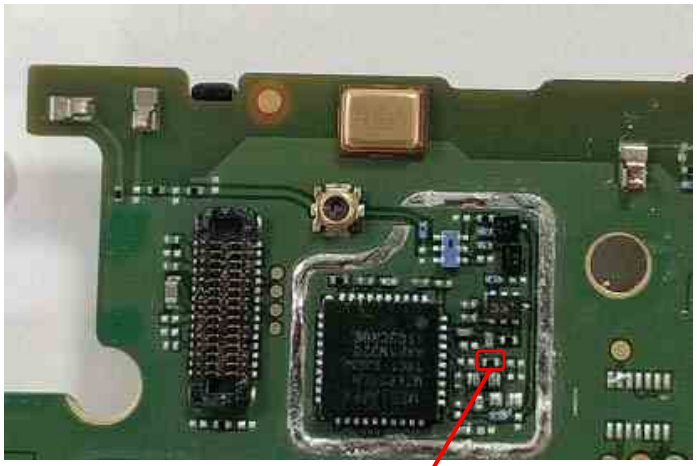


**Circuit Diagram**

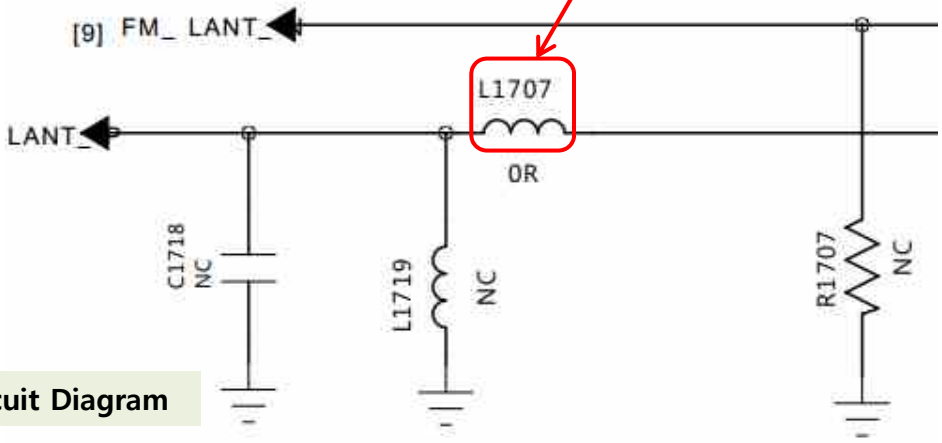




Copyright © 2019 LG Electronics. Inc. All right reserved.
Only training and service purposes

**LCD Parts on the main board**

**Main LCD control signals are generated by MT6739**

**Checking Flow**

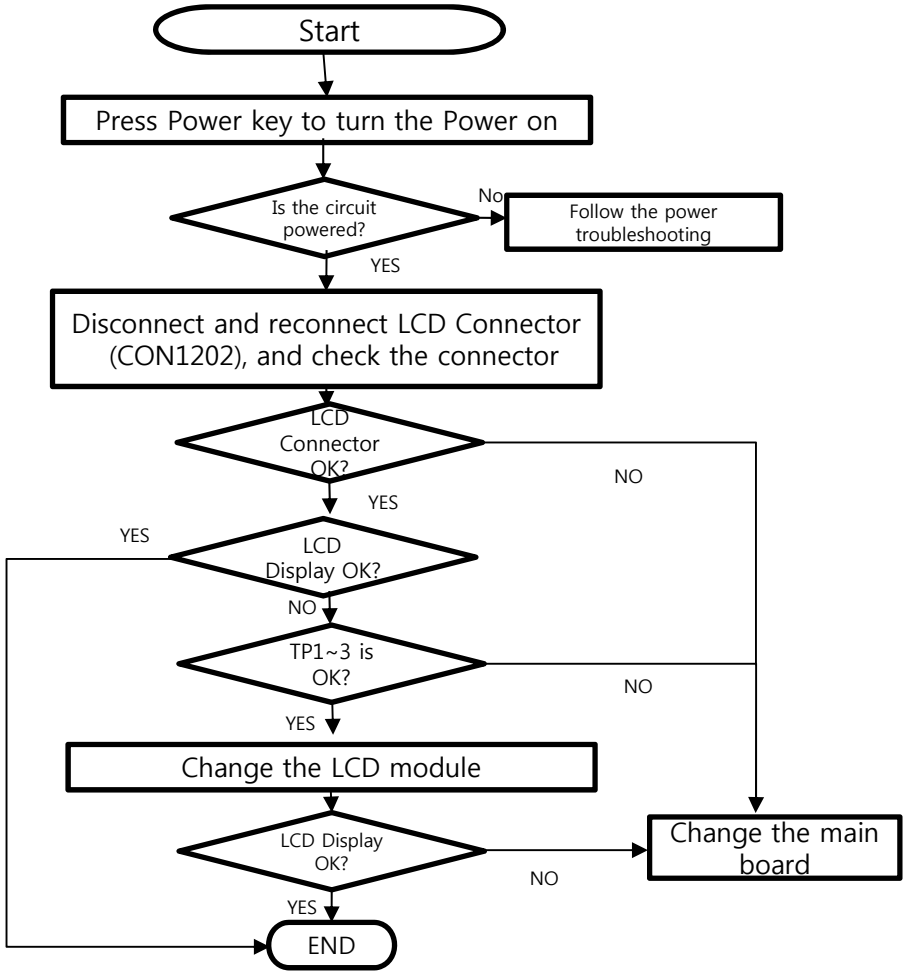


**PCB Image**

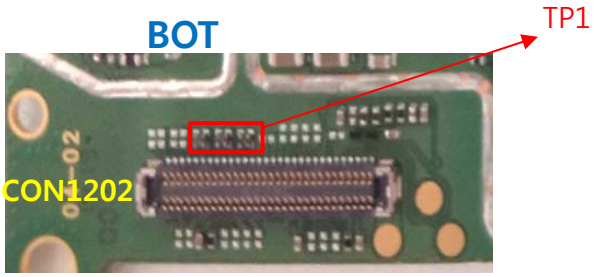


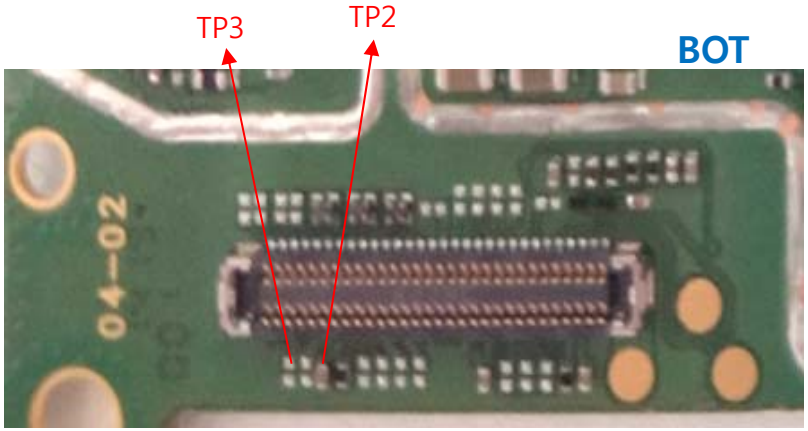




Copyright © 2019 LG Electronics. Inc. All right reserved.
Only training and service purposes

**Main LCD control signals are generated by MT6739**

## Circuit Diagram

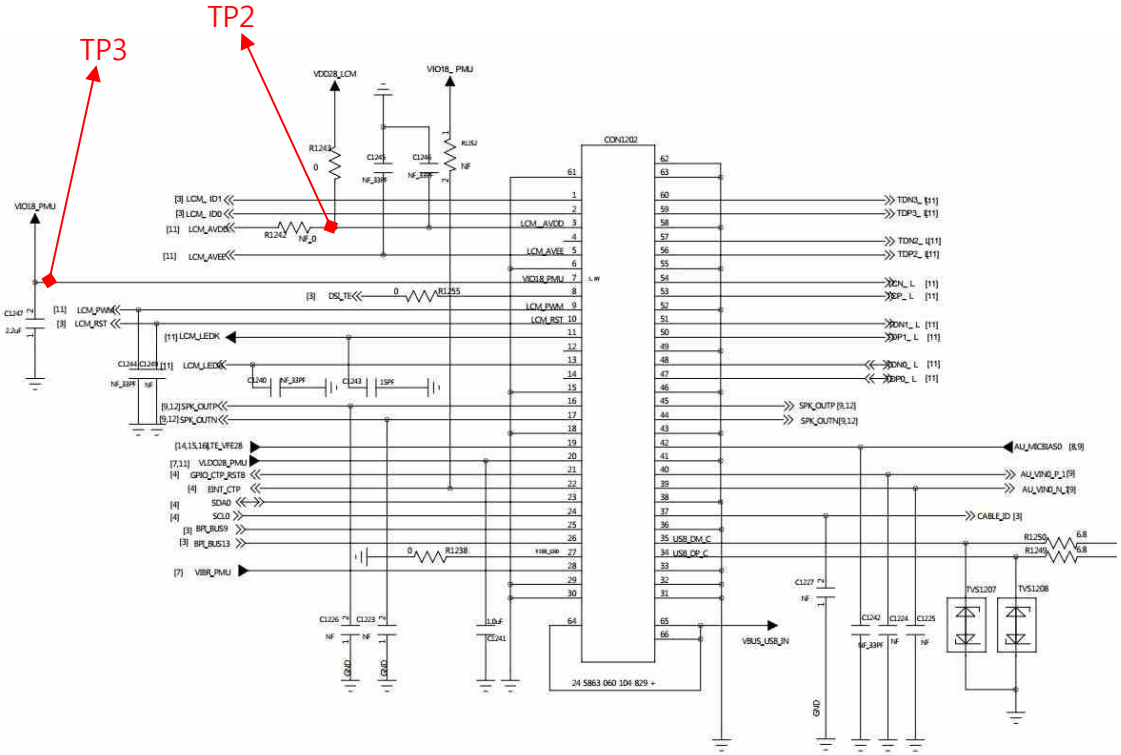


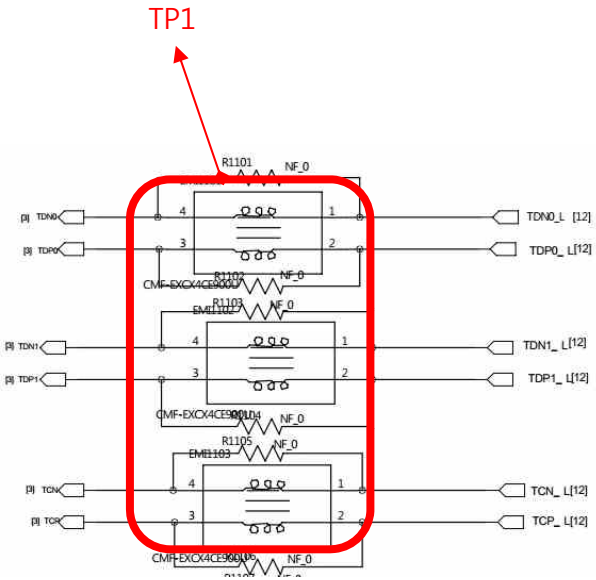




Copyright © 2019 LG Electronics. Inc. All right reserved.
Only training and service purposes

**Touch Parts on the main board**

**Touch control signals are generated by MT6739**

**Checking Flow**

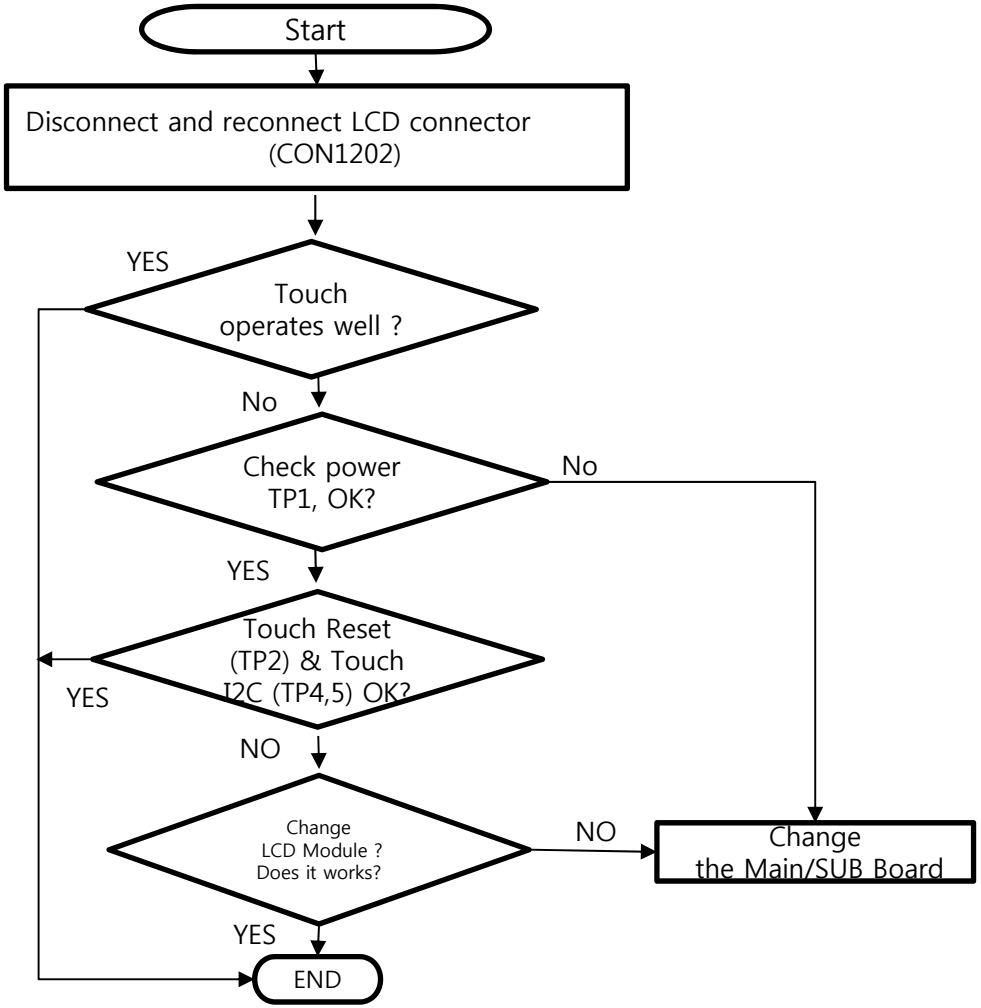


**PCB Image**

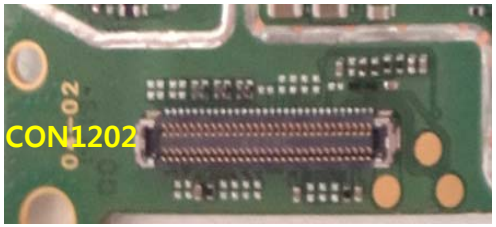


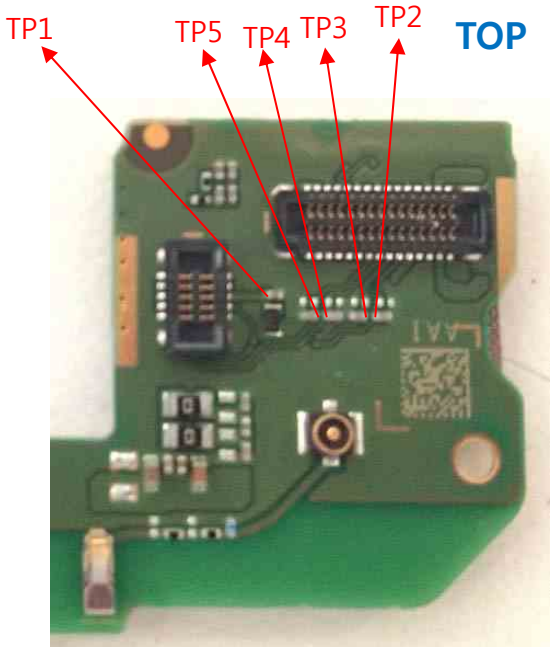




Copyright © 2019 LG Electronics. Inc. All right reserved.
Only training and service purposes

**Touch Parts on the main board**

**Touch control signals are generated by MT6739**

**Circuit Diagram-Main Board**

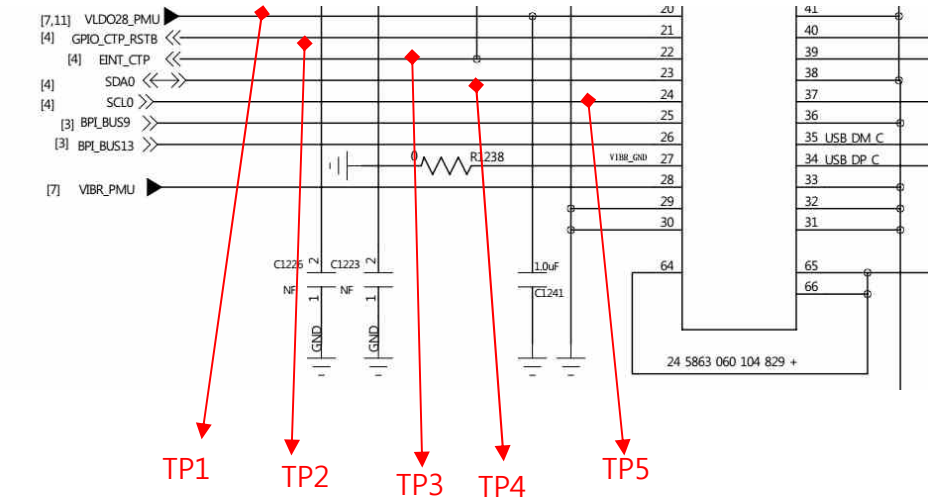


**Circuit Diagram-SUB Board**

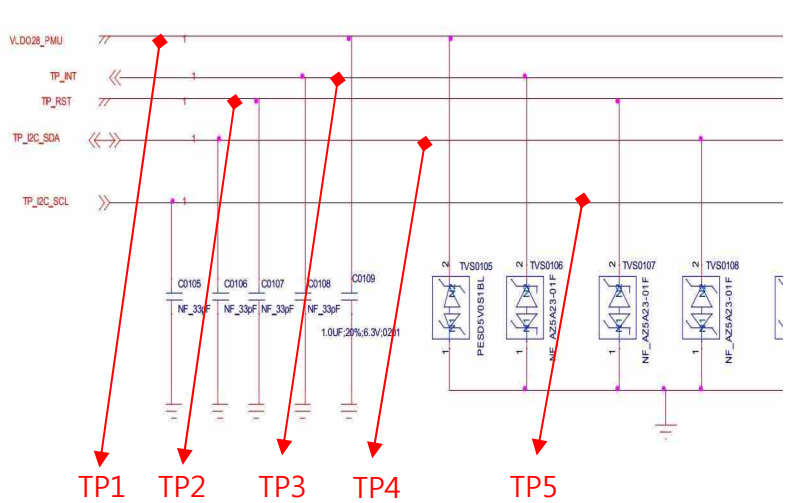




Copyright ⓒ 2019 LG Electronics. Inc. All right reserved.
Only training and service purposes

**The acc. sensors are calibrated by using SW algorithm.**

## Checking Flow

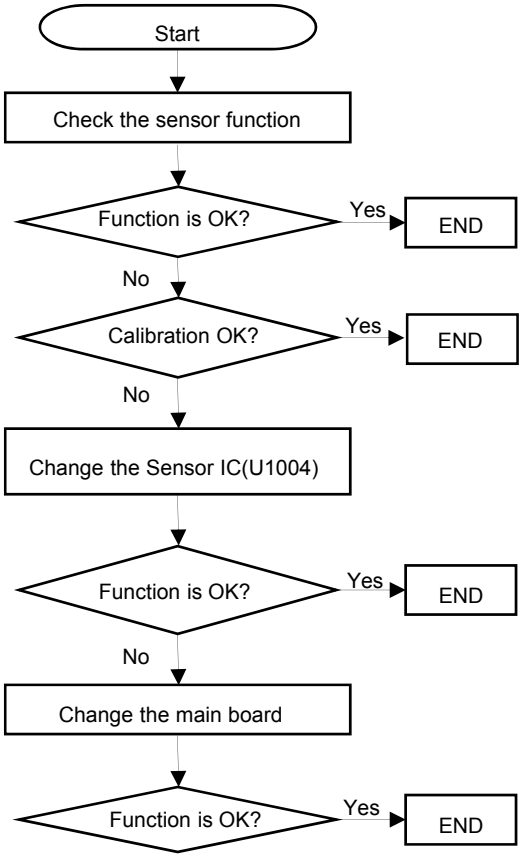


## Image

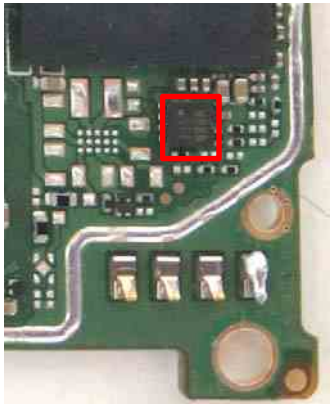

## Circuit Diagram

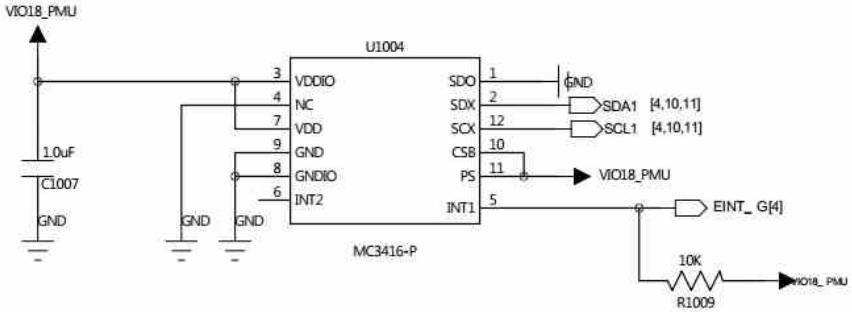




Copyright © 2019 LG Electronics. Inc. All right reserved.
Only training and service purposes

**Proximity Sensor is worked as below: Send Key click ➔ Phone number click ➔ Call connected ➔ Object moved at the sensor ➔ Control the screen's on/off operation automatically**

## Checking Flow

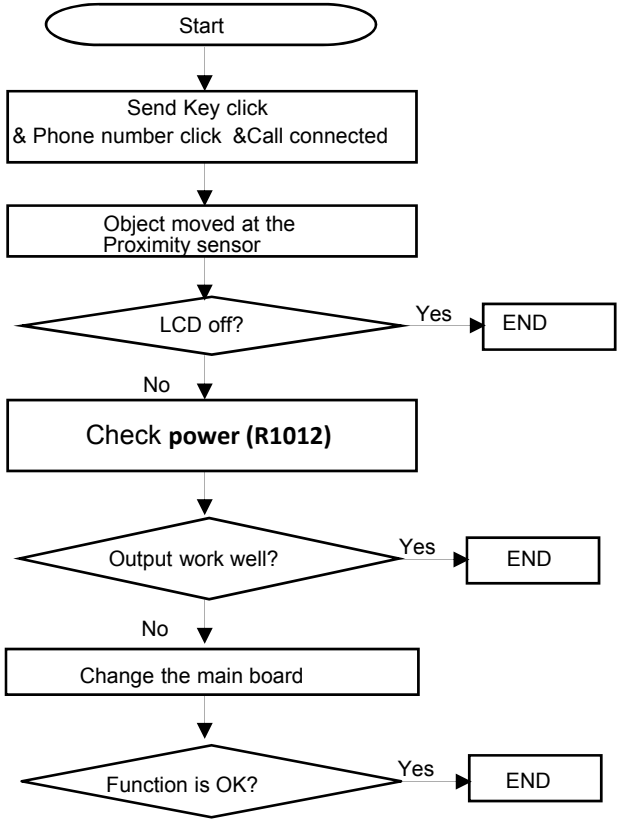


## Image

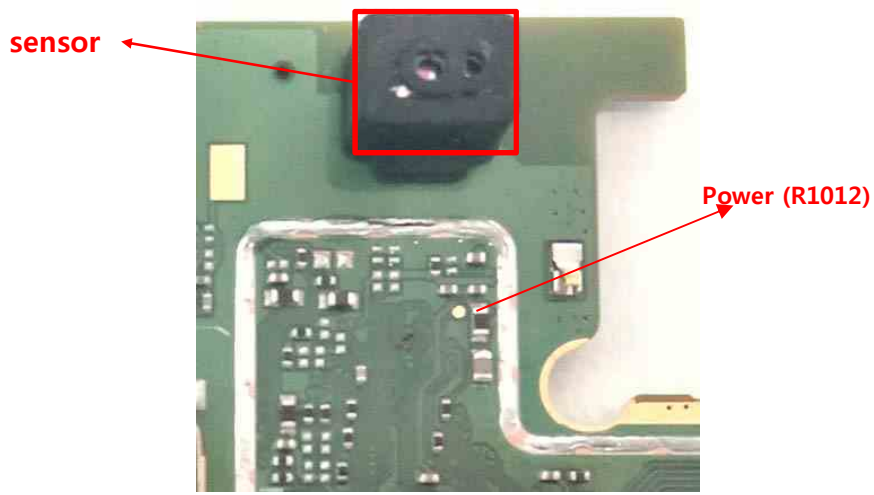


## Circuit Diagram

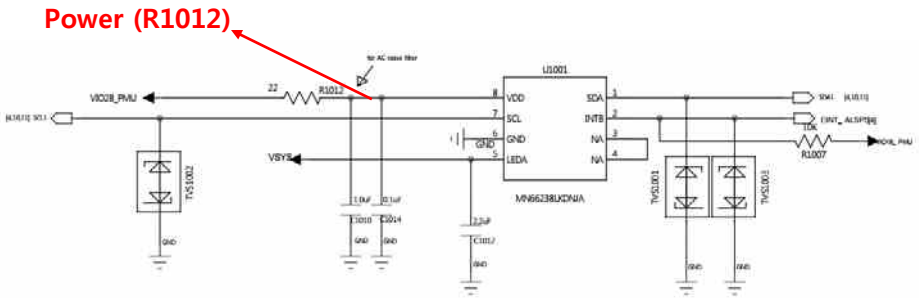




Copyright © 2019 LG Electronics. Inc. All right reserved.
Only training and service purposes

**When 8M Rear Camera doesn't work, check CON1101 and TP Voltage.**

## Checking Flow

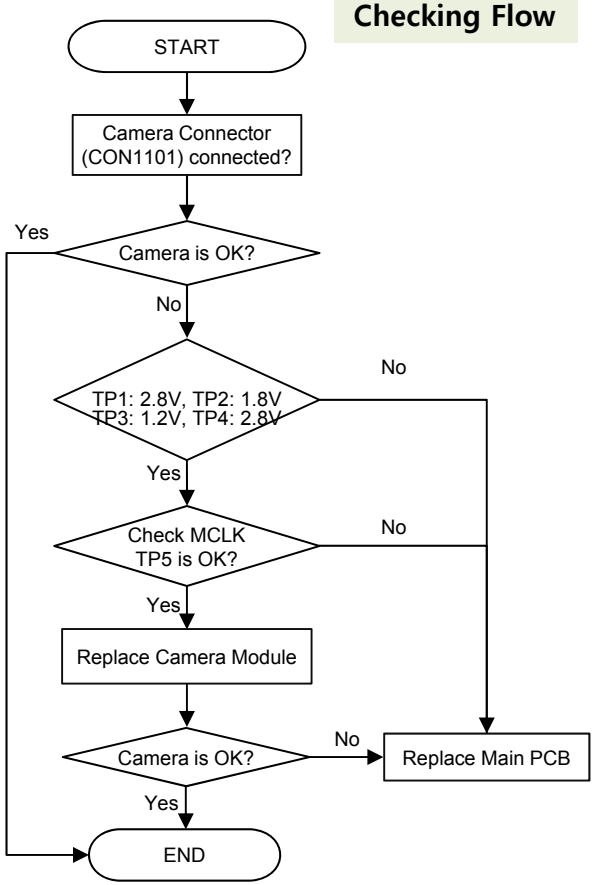


## Image

BOT

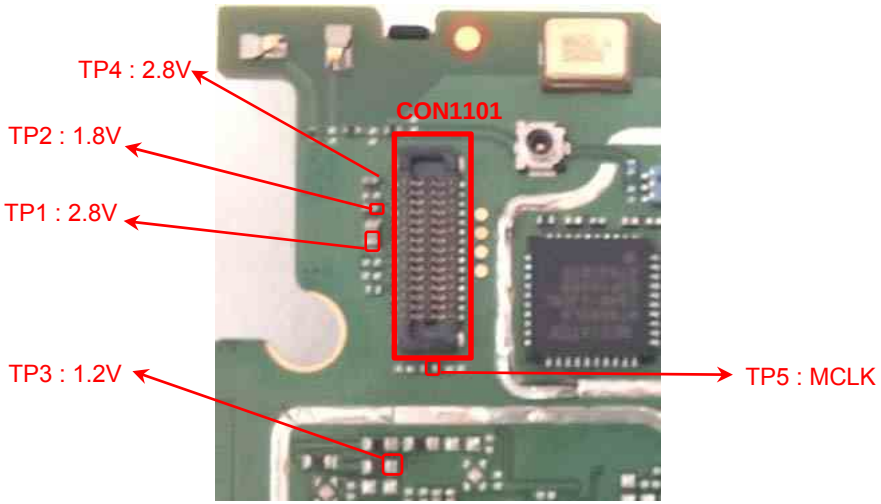


## Circuit Diagram

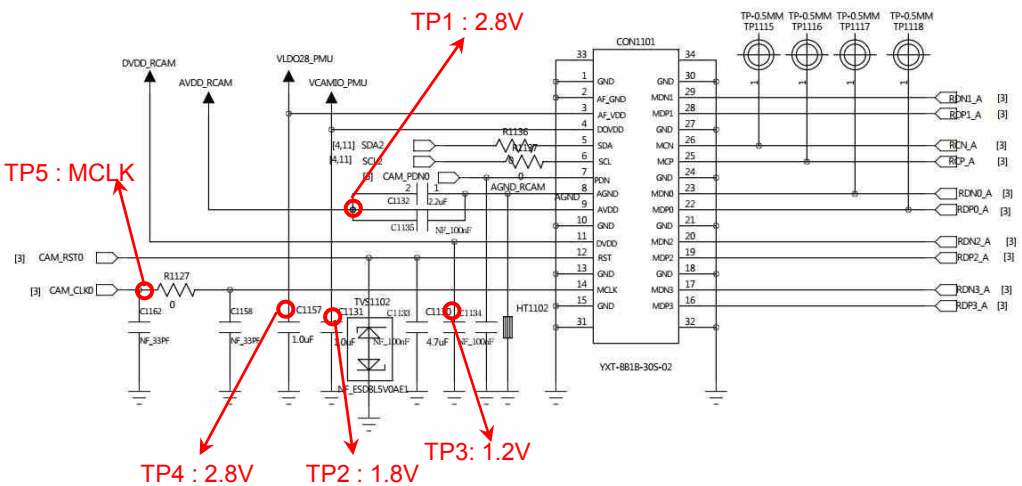




Copyright © 2019 LG Electronics. Inc. All right reserved.
Only training and service purposes

**When 5M Front camera is not working, check CON1102 and TP Voltage.**

## Checking Flow

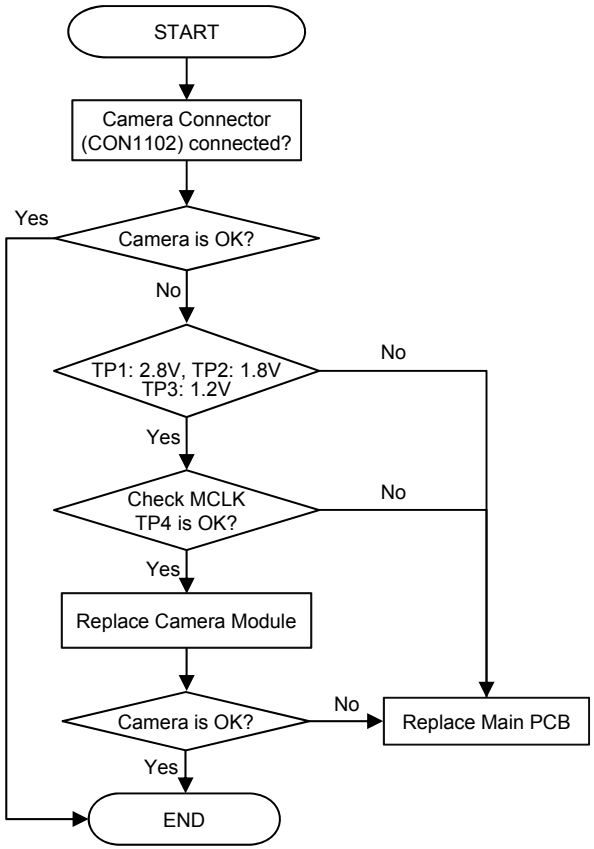


## Image

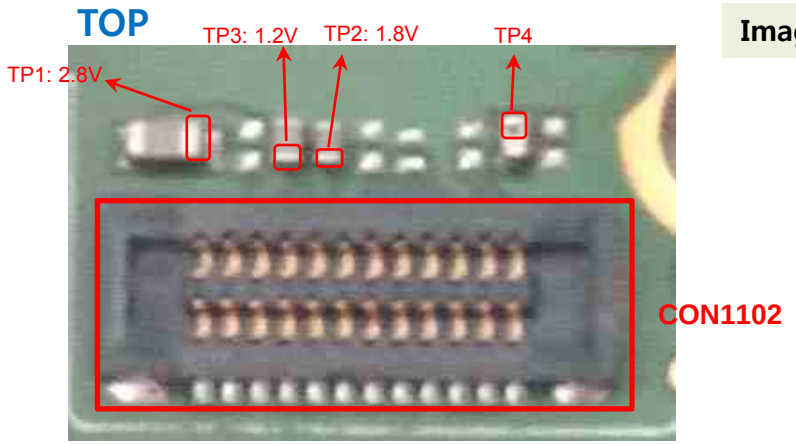


## Circuit Diagram

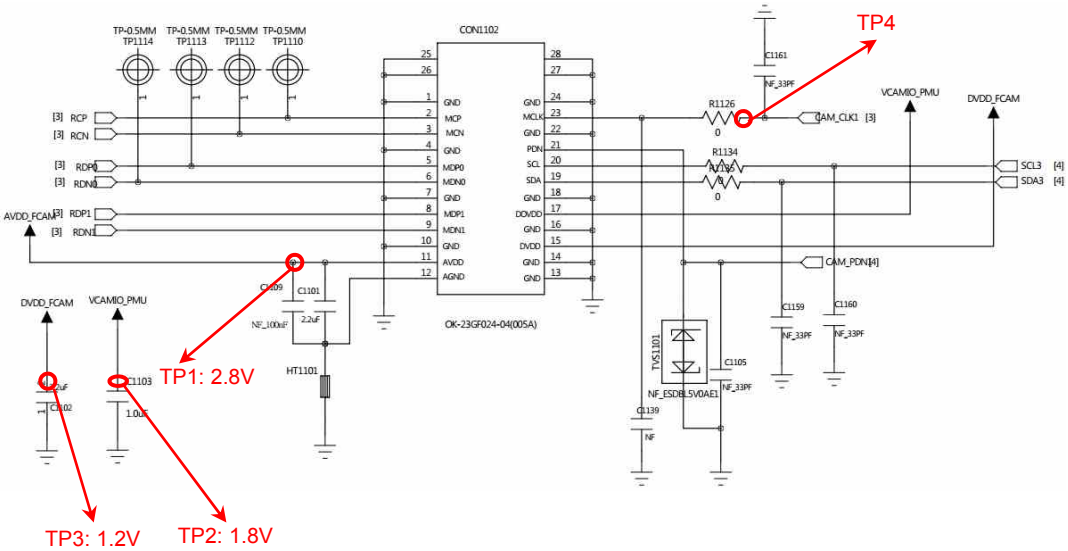




Copyright © 2019 LG Electronics. Inc. All right reserved.
Only training and service purposes

**Motor is not working**

**Checking Flow**

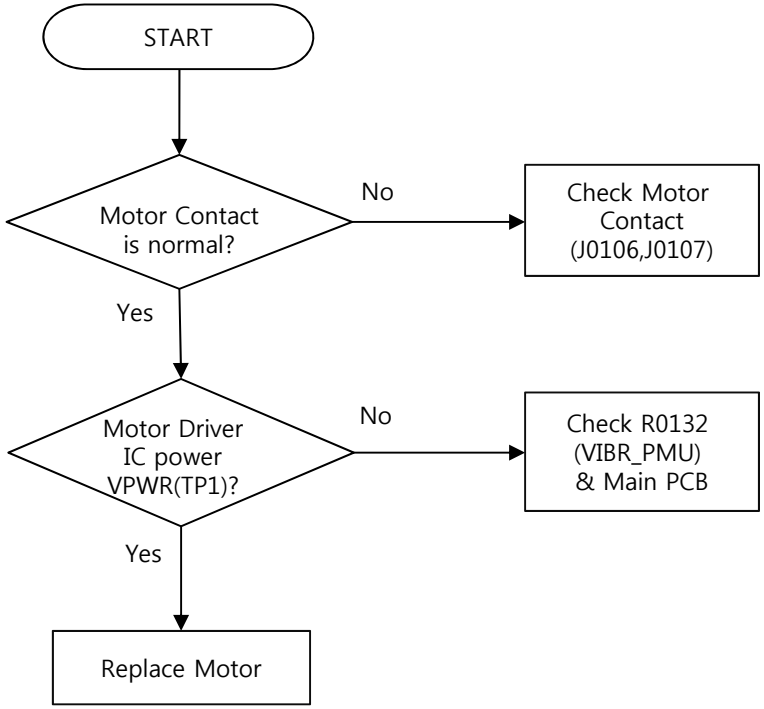


**Placement**

**Sub BOT**

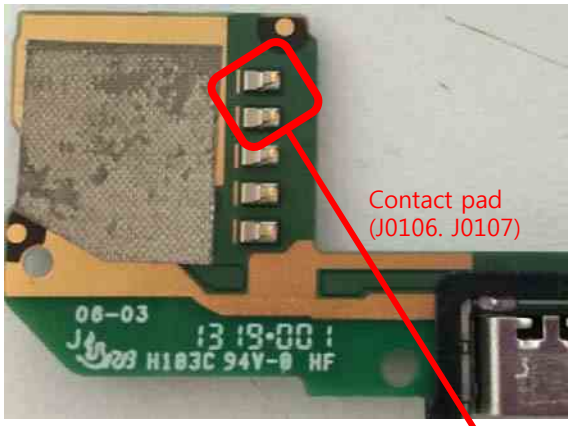


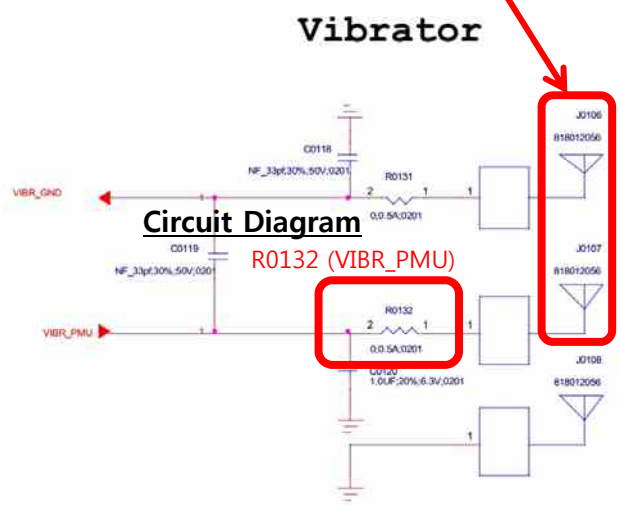


**Circuit Diagram**



Copyright © 2019 LG Electronics. Inc. All right reserved.
Only training and service purposes

## 3.17 BT/Wi-Fi/GPS PART

### 3.17.1 Checking Connectivity DC Power

**Checking Flow**

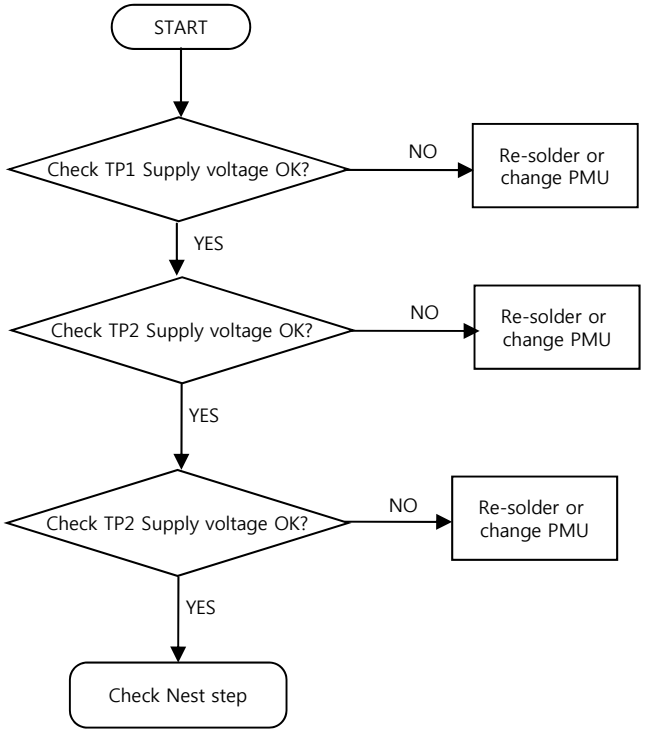


**Image**

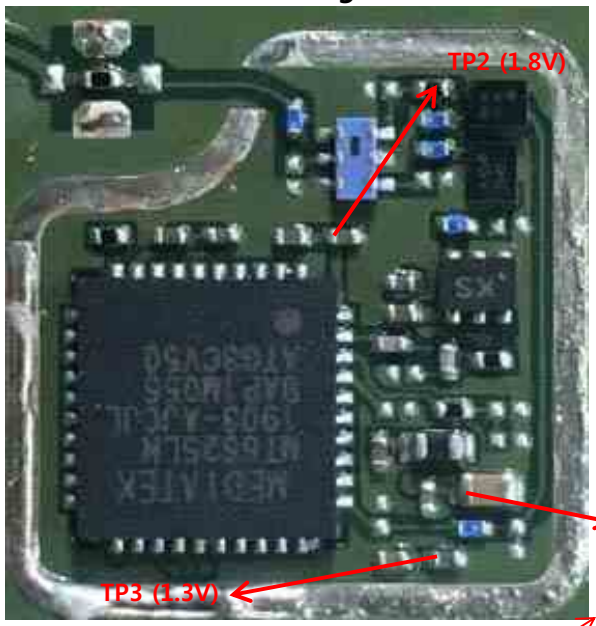


**Main Top**

**Circuit Diagram**

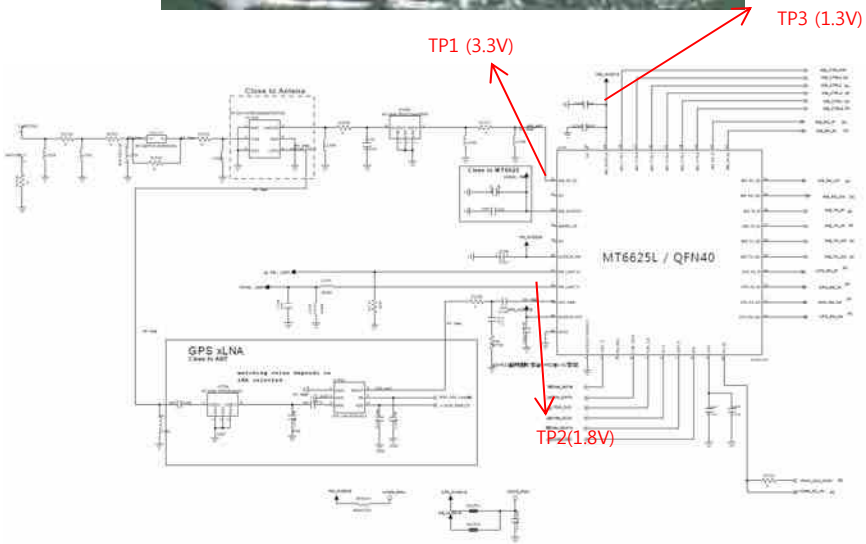




Copyright © 2019 LG Electronics. Inc. All right reserved.
Only training and service purposes

## 3.17 BT/Wi-Fi/GPS PART

### 3.17.2 BT&WIFI&GPS Trouble Shooting

**BT/WIFI/GPS Signal Path**

Main Top

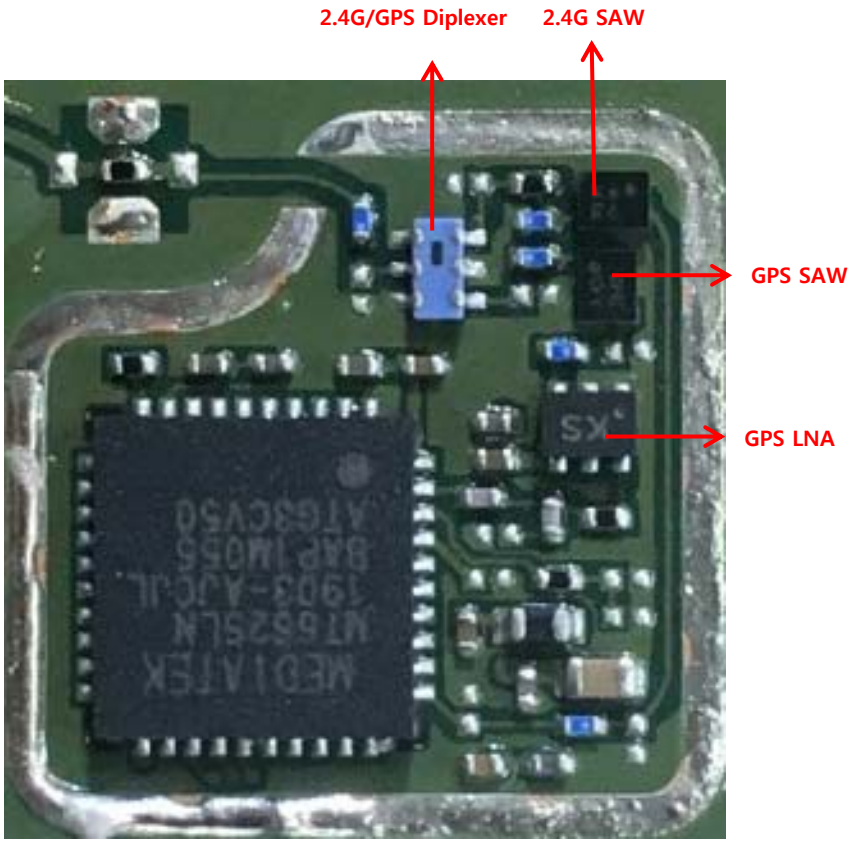


Main Bot

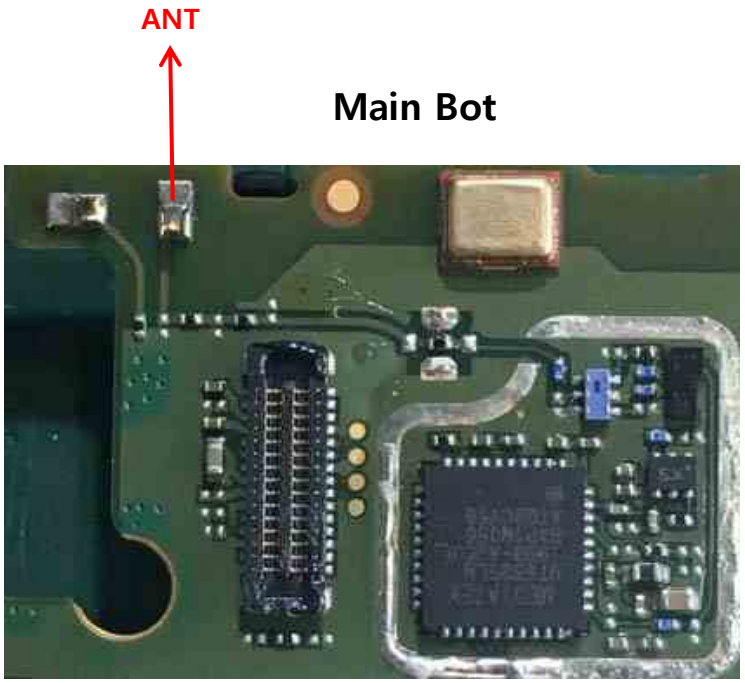




Copyright © 2019 LG Electronics. Inc. All right reserved.
Only training and service purposes

# BLOCK DIAGRAM



Copyright © 2019 LG Electronics. Inc. All right reserved.
Only training and service purposes

# [MH6_Block Diagram]

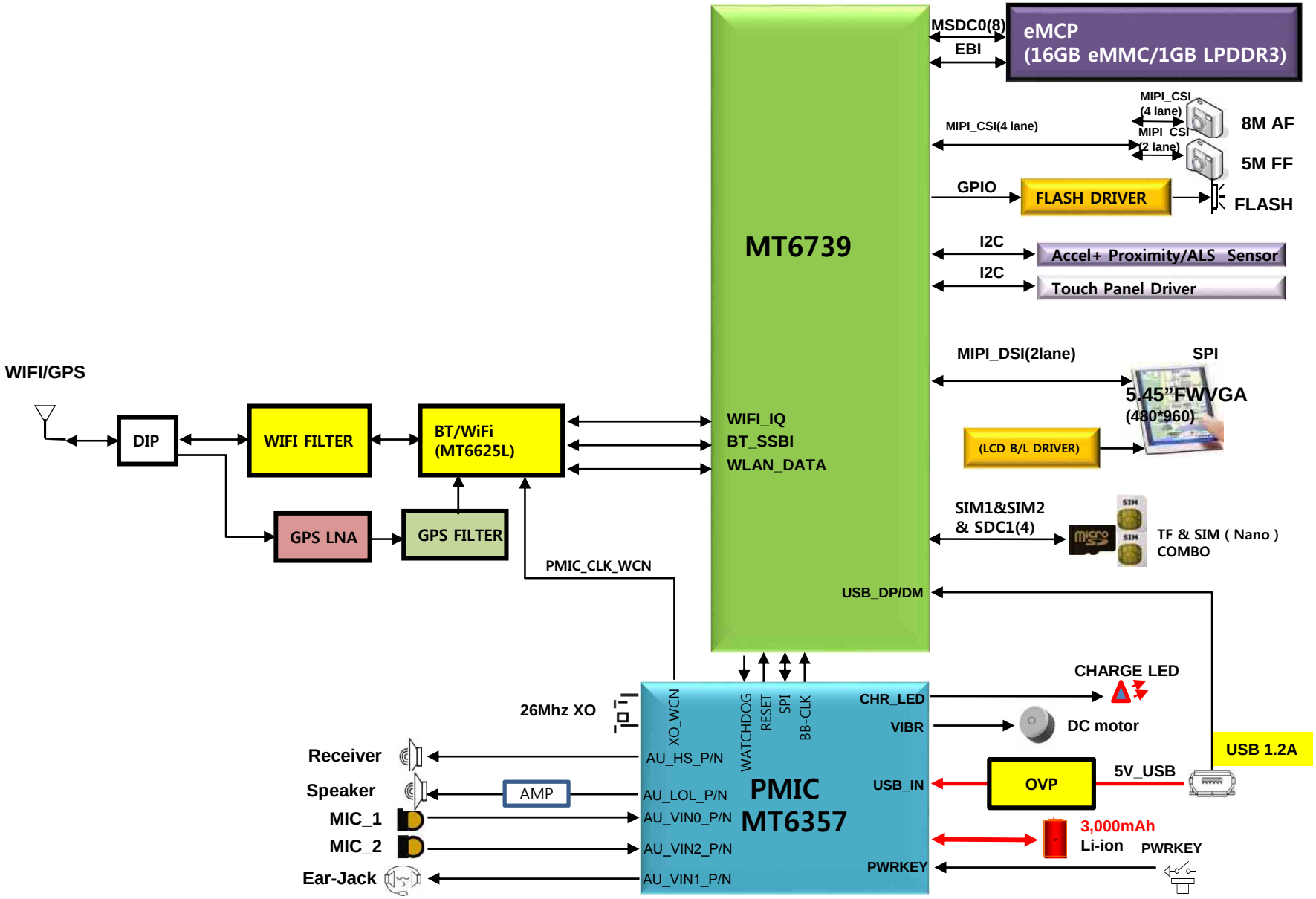

# Power Block Diagram

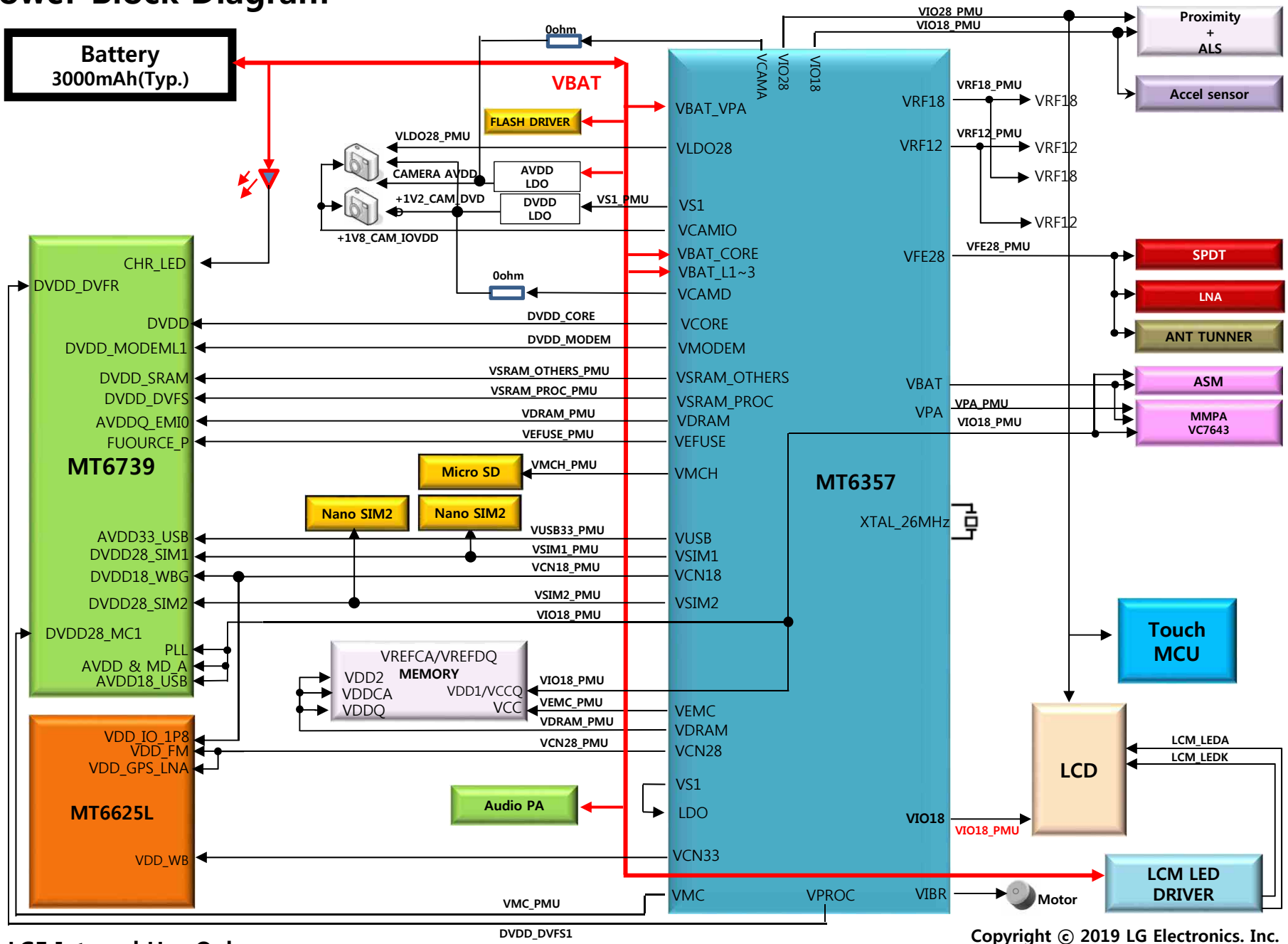




Copyright © 2019 LG Electronics. Inc.
All right reserved. Only training and service purposes

# RF Block

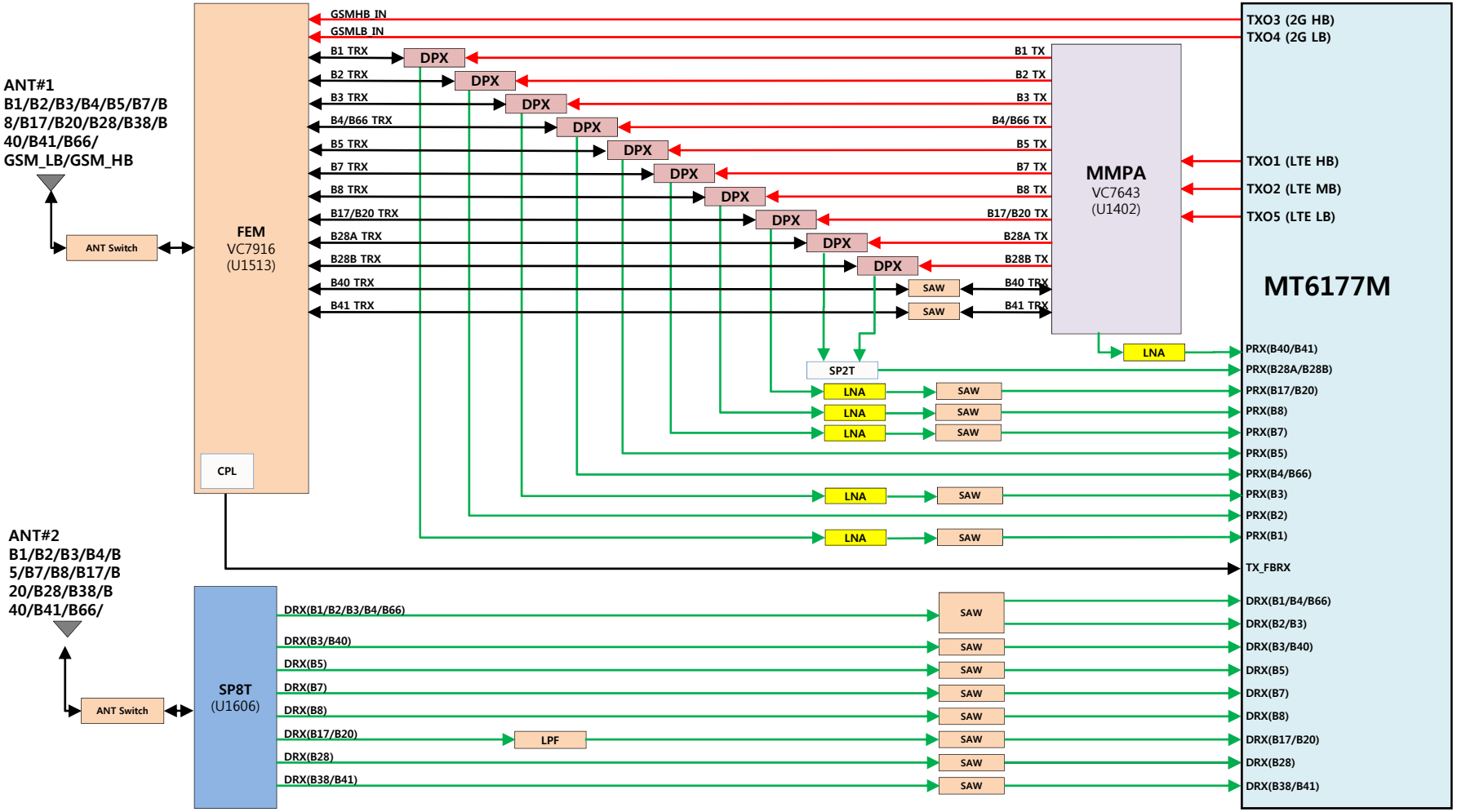
ANT#1
B1/B2/B3/B4/B5/B7/B8/B17/B20/B28/B38/B40/B41/B66/GSM_LB/GSM_HB
ANT Switch
FEM
VC7916
(U1513)
CPL
GSMHB_IN
GSMLB_IN
B1 TRX
B2 TRX
B3 TRX
B4/B66 TRX
B5 TRX
B7 TRX
B8 TRX
B17/B20 TRX
B28A TRX
B28B TRX
B40 TRX
B41 TRX
DPX
SAW
B1 TX
B2 TX
B3 TX
B4/B66 TX
B5 TX
B7 TX
B8 TX
B17/B20 TX
B28A TX
B28B TX
B40 TRX
B41 TRX
MMPA
VC7643
(U1402)
LNA
SP2T
TXO3 (2G HB)
TXO4 (2G LB)
TXO1 (LTE HB)
TXO2 (LTE MB)
TXO5 (LTE LB)
MT6177M
PRX(B40/B41)
PRX(B28A/B28B)
PRX(B17/B20)
PRX(B8)
PRX(B7)
PRX(B5)
PRX(B4/B66)
PRX(B3)
PRX(B2)
PRX(B1)
TX_FBRX
ANT#2
B1/B2/B3/B4/B5/B7/B8/B17/B20/B28/B38/B40/B41/B66/
ANT Switch
SP8T
(U1606)
DRX(B1/B2/B3/B4/B66)
DRX(B3/B40)
DRX(B5)
DRX(B7)
DRX(B8)
DRX(B17/B20)
DRX(B28)
DRX(B38/B41)
LPF
DRX(B1/B4/B66)
DRX(B2/B3)
DRX(B3/B40)
DRX(B5)
DRX(B7)
DRX(B8)
DRX(B17/B20)
DRX(B28)
DRX(B38/B41)

# System Logic Block Diagram ; Memory, Micro SD, SIM

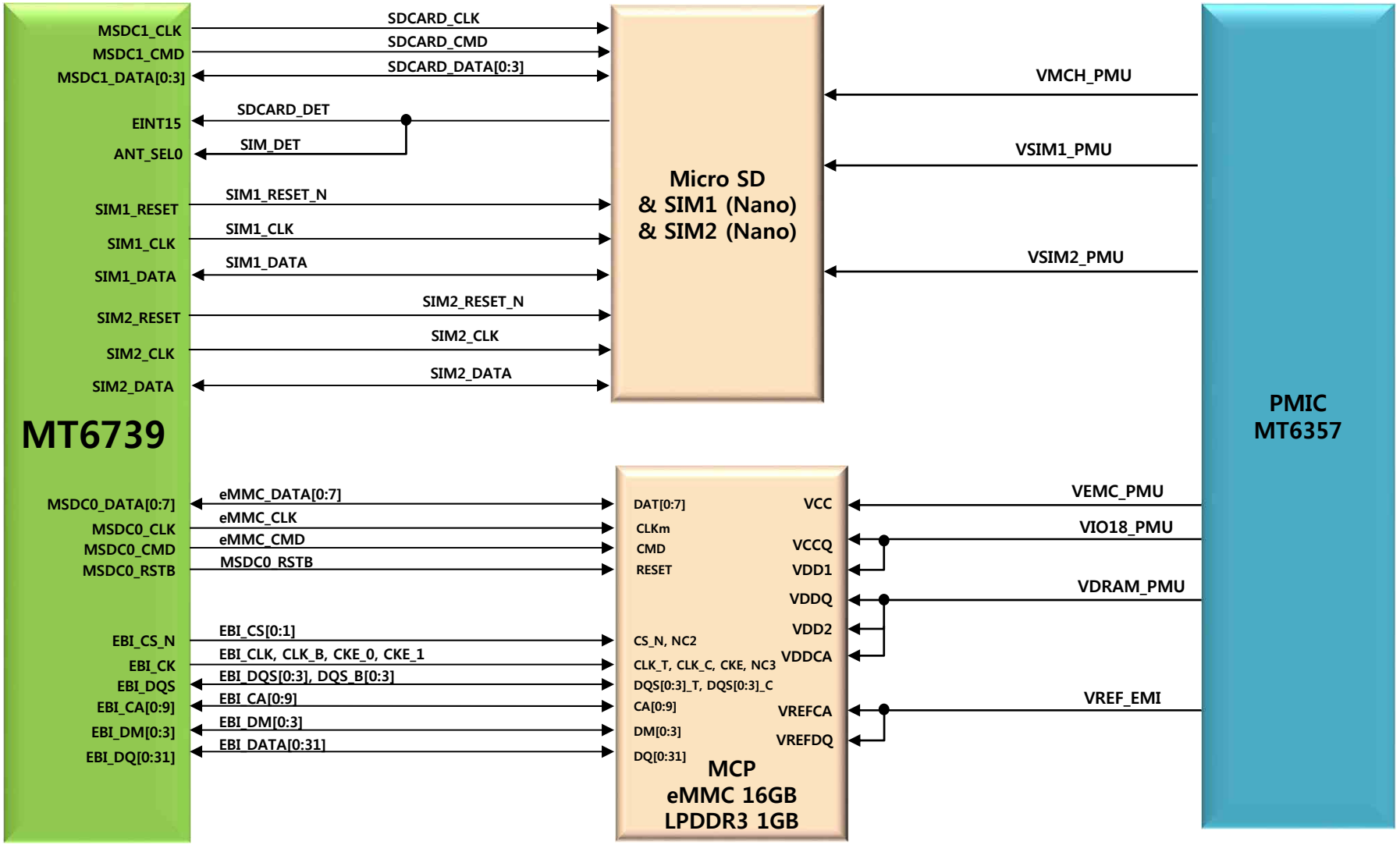




Copyright © 2019 LG Electronics. Inc. All right reserved.
Only training and service purposes

# System Logic Block Diagram : LCD / TOUCH

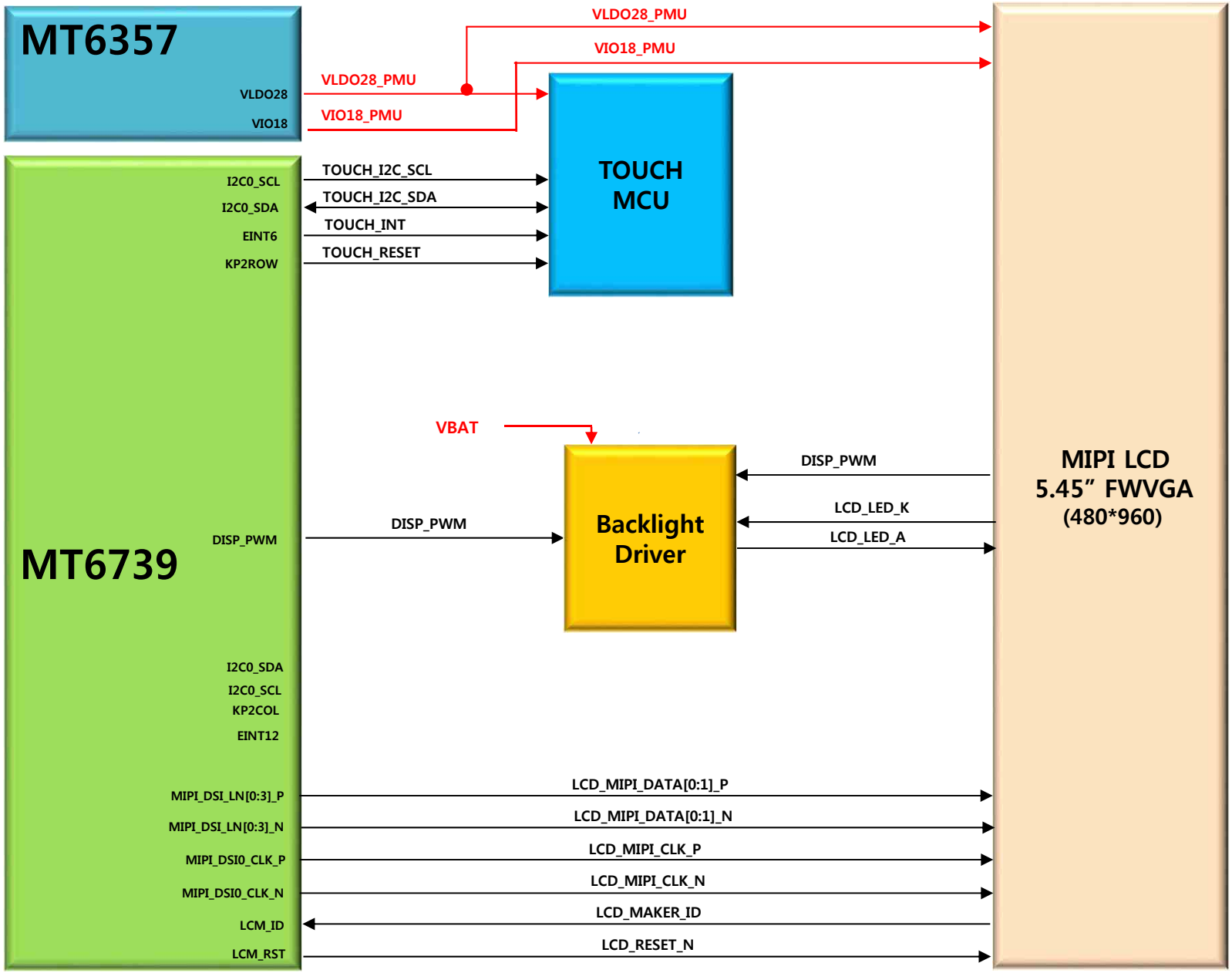




Copyright © 2019 LG Electronics. Inc. All right reserved.
Only training and service purposes

# System Logic Block Diagram : CAMERA

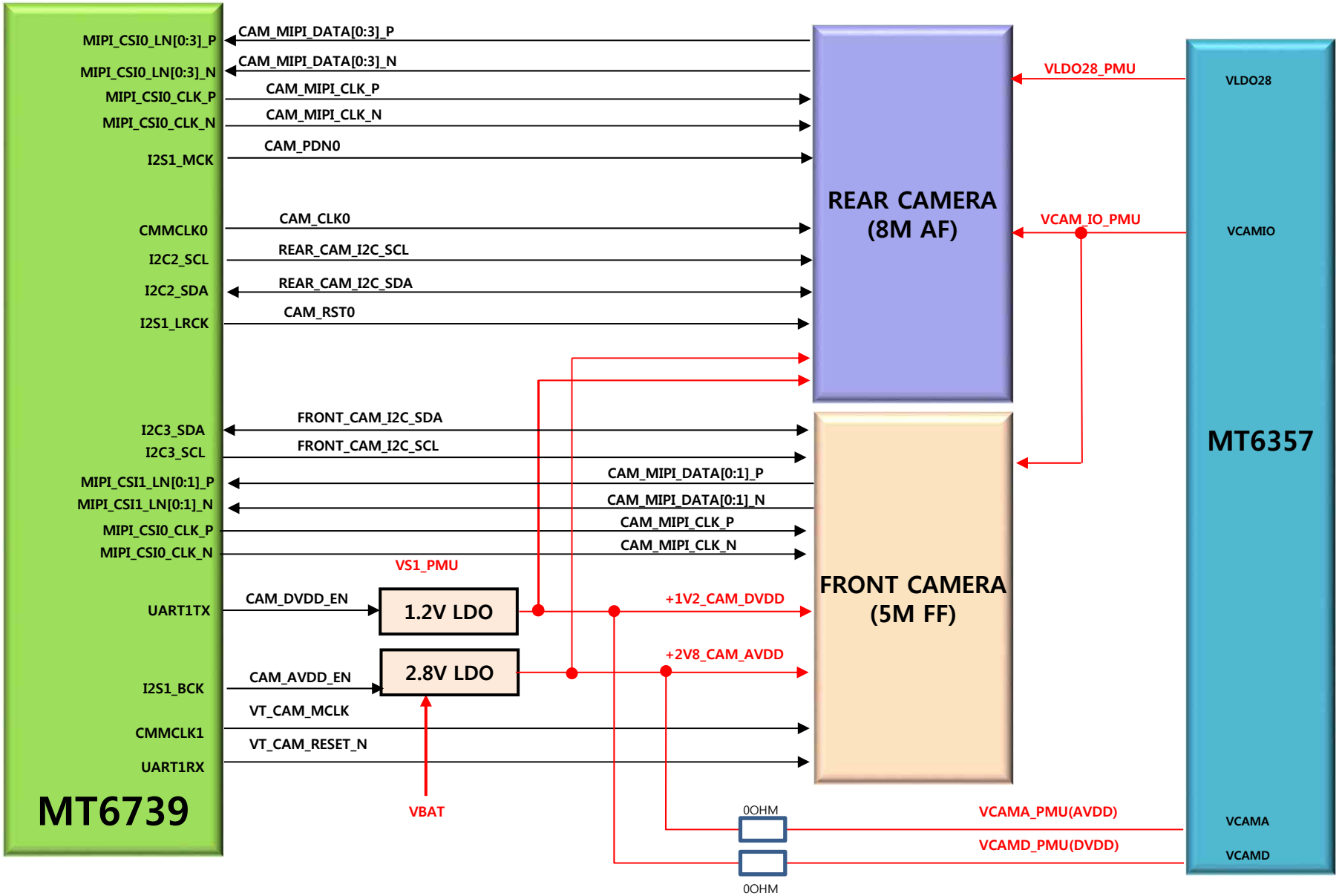




Copyright © 2019 LG Electronics. Inc. All right reserved.
Only training and service purposes

# System Logic Block Diagram : SENSOR, MOTOR

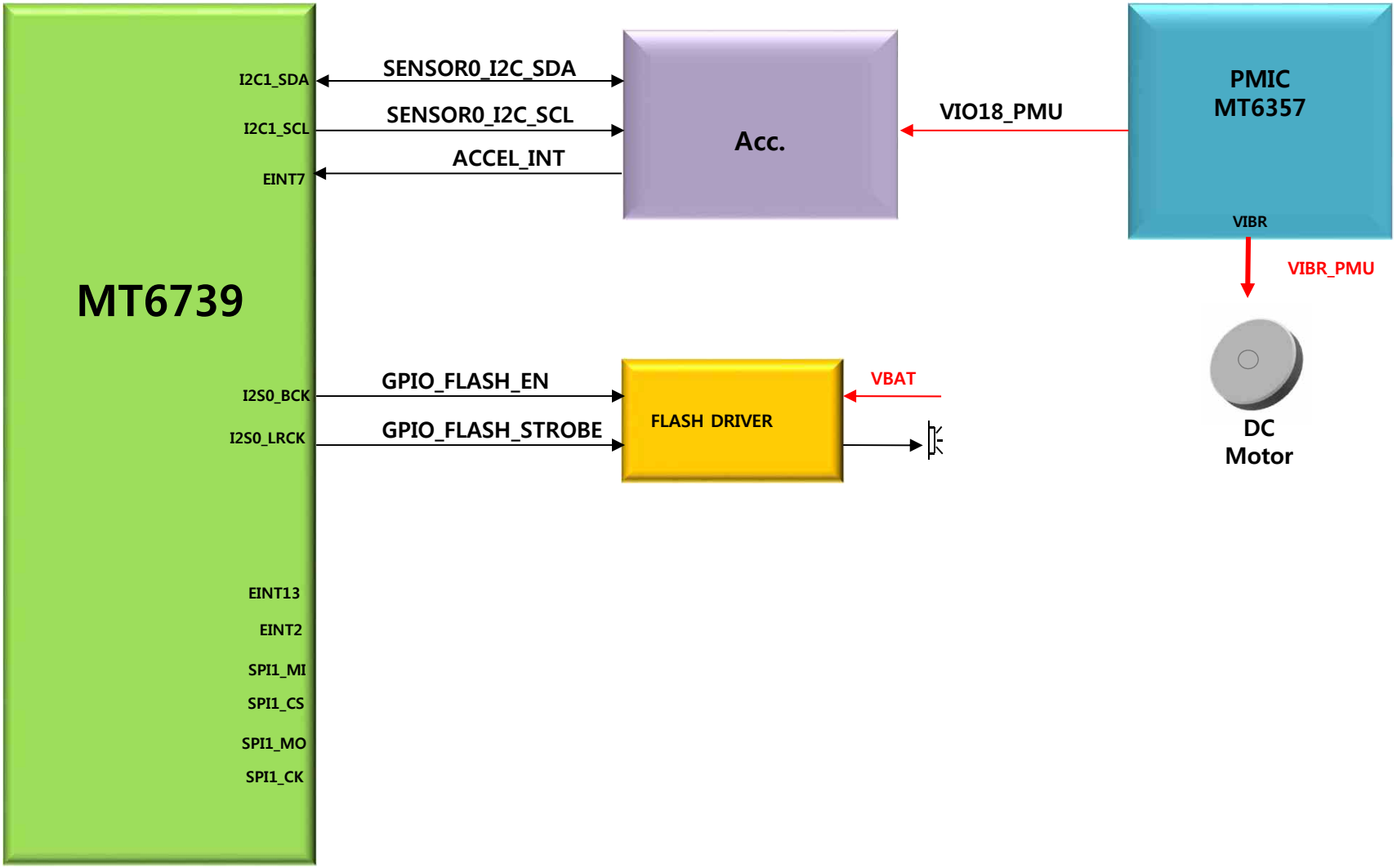

# Audio Block Diagram

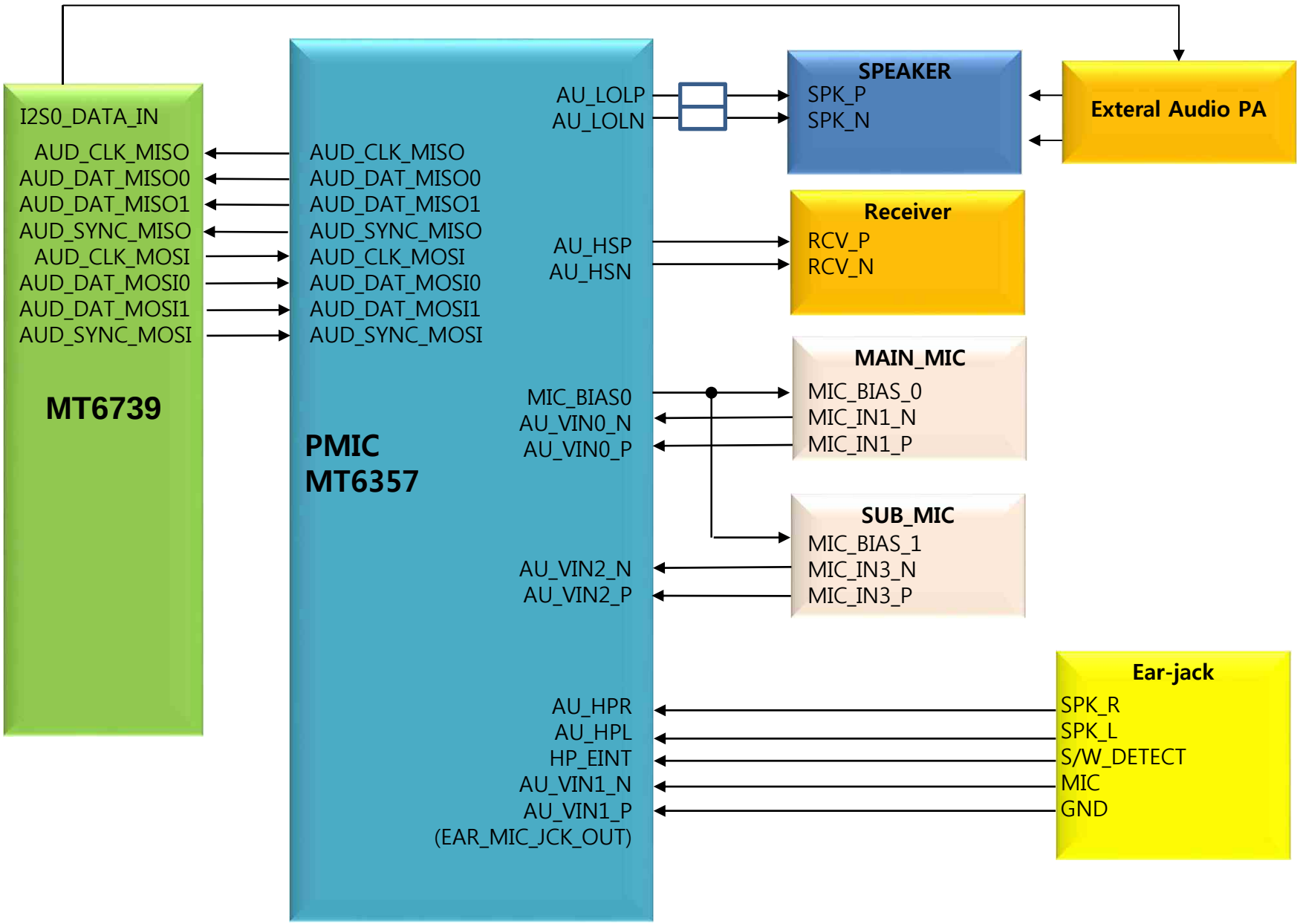




Copyright © 2019 LG Electronics. Inc. All right reserved.
Only training and service purposes

# BT, WiFi,GPS

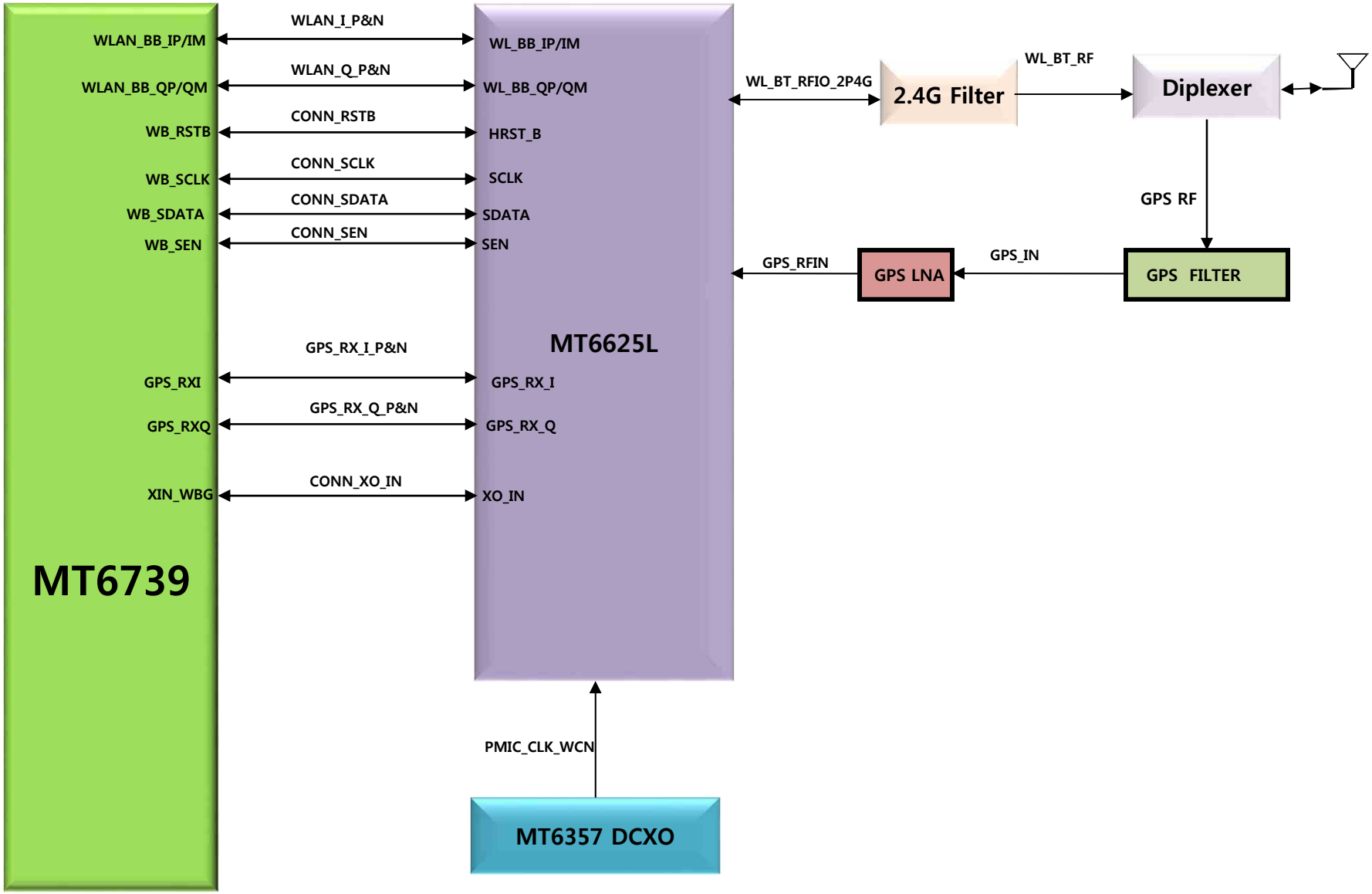




Copyright © 2019 LG Electronics. Inc. All right reserved.
Only training and service purposes

# Appendix : I2C Flow

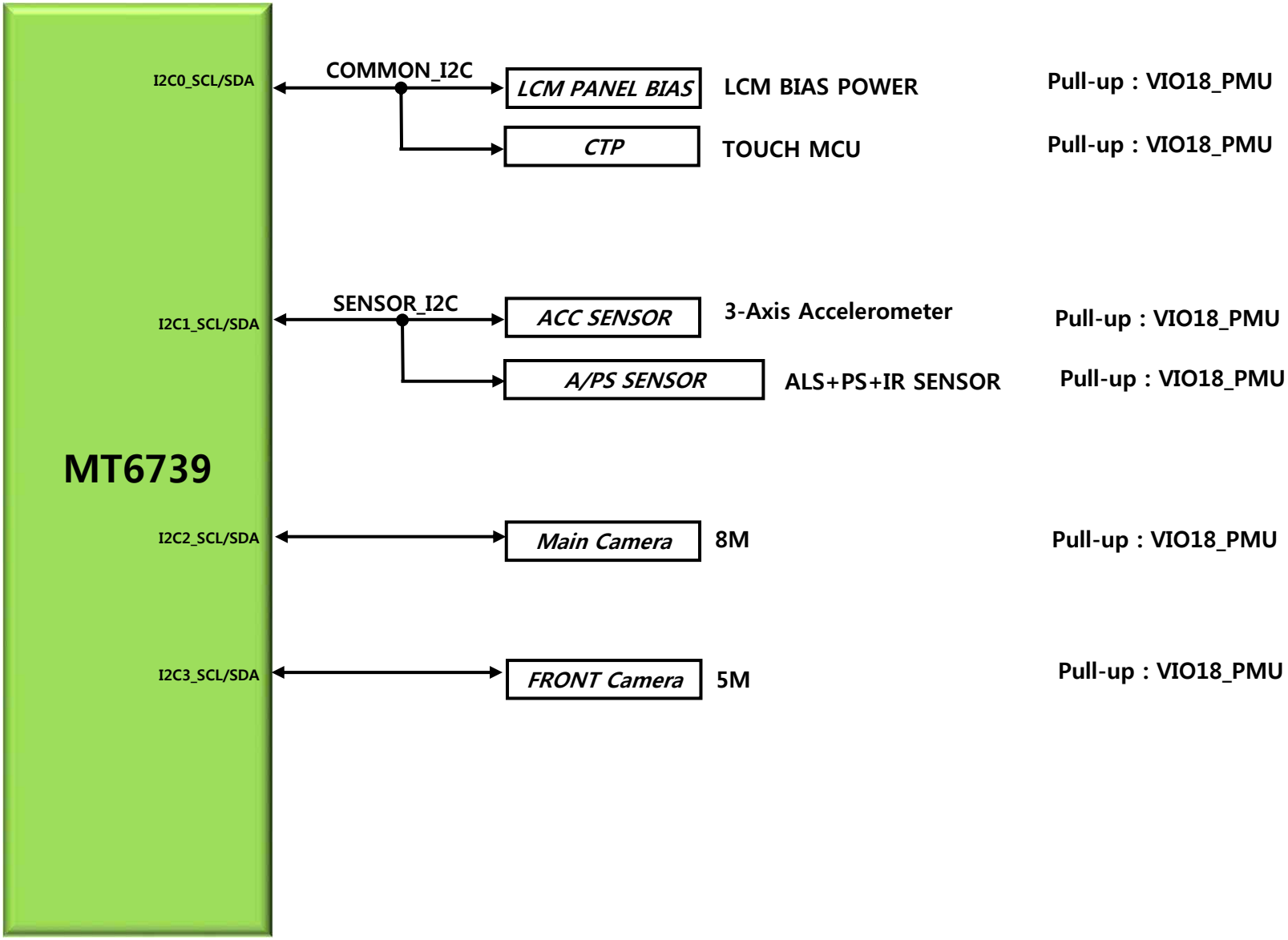




Copyright © 2019 LG Electronics. Inc. All right reserved.
Only training and service purposes

# CIRCUIT DIAGRAM



Copyright © 2019 LG Electronics. Inc. All right reserved.
Only training and service purposes

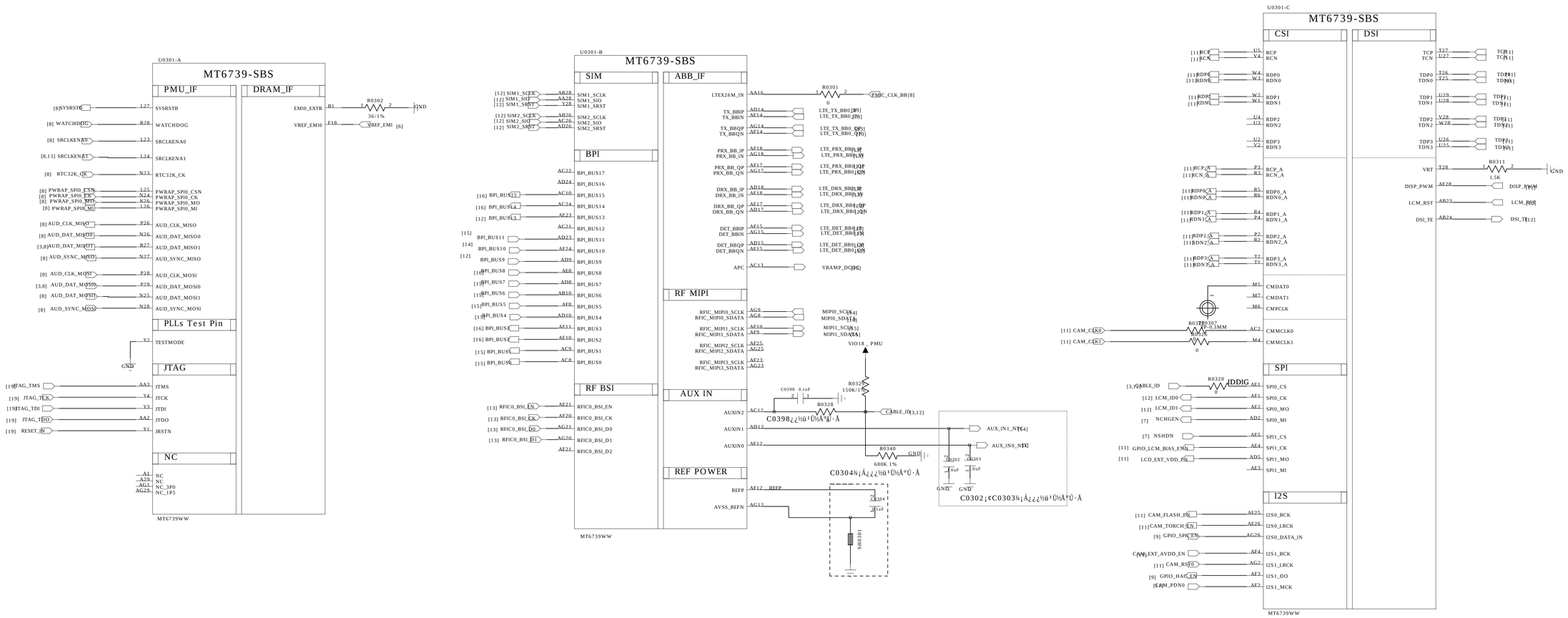


Schematic design notice of "03_MT6739_BB1" page.

Note 03-1: AUD_DAT_MOSI is JTAG featuring pin boot strap [AUD_DAT_MOSI0 default status is LO]

| AUD_DAT_MOSI0 | Mode | Note |
|---|---|---|
| LO | Default | N/A |
| HI | Aux Func. trap_MD_JTAG_AP_JTAG | MD JTAG = CMDAT0/CMDAT1/CMPCLK/CMMCLK/CMMCLK1 |

Note 03-2: ANT_SEL2 and AUD_DAT_MISO1 is storage booting [ANT_SEL2 default status is HI, AUD_DAT_MISO1 default status is LO]

| ANT_SEL2 | AUD_DAT_MISO1 | Storage Booting |
|---|---|---|
| HI | LO | TLC Boot |
| HI | HI | SLC Boot |
| LO | LO | eMMC Boot |
| LO | HI | N/A |

| | | | |
|---|---|---|---|
| TITLE: | <TITLE> | REV: | <REV> |
| DOCUMENT NO.: | 03_MT6739_BB1 | SIZED: | A1 |
| DEPARTMENT: | Hardware DEPT. | | |
| COMPANY: | WINGTECH | | |
| DESIGNER: <DESIGNER> | Last Saved Date: 2019/4/8 | SHEET: 3 OF 20 | |

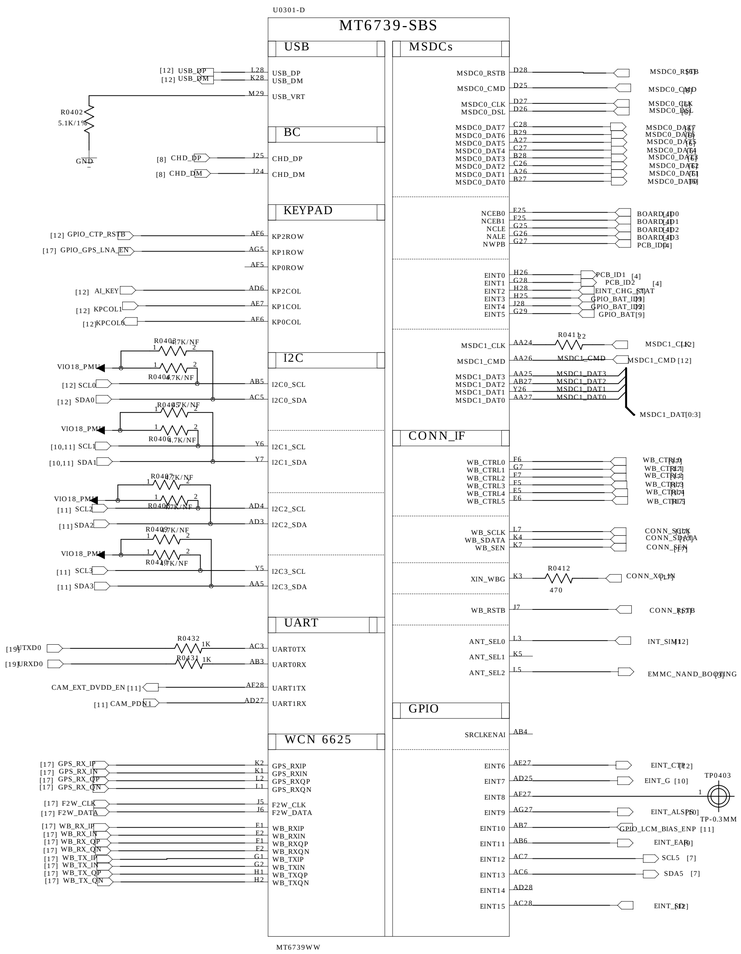


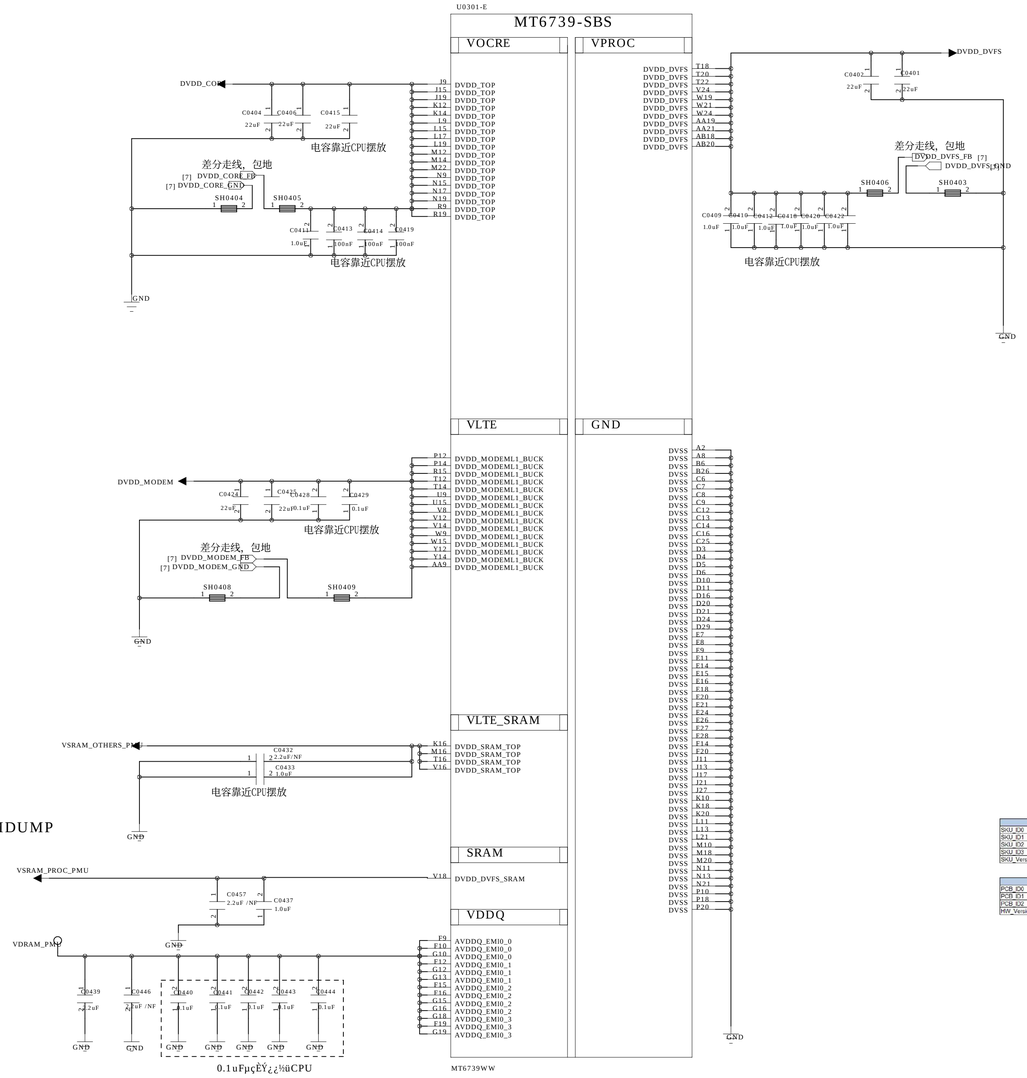


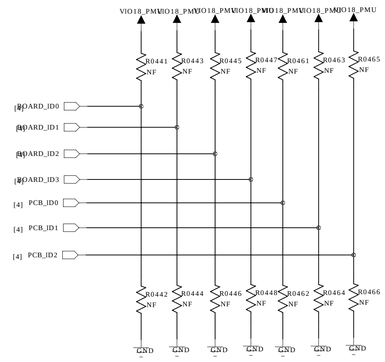


| SKU配置表(PB) | | | | | | | | | |
|---|---|---|---|---|---|---|---|---|---|
| SKU_ID0 | 0 | 0 | 0 | 0 | 0 | 0 | 0 | 0 | |
| SKU_ID1 | 0 | 0 | 0 | 0 | 1 | 1 | 1 | 1 | |
| SKU_ID2 | 0 | 0 | 1 | 1 | 0 | 0 | 1 | 1 | |
| SKU_Version | S96789AA1 | S96789BA1 | S96789CA1 | S96789DA1 | S96789EA1 | S96789FA1 | S96789GA1 | S96789HA1 | |

| PCB_VERSION | | | | | | | | | |
|---|---|---|---|---|---|---|---|---|---|
| PCB_ID0 | 0 | 0 | 0 | 0 | 1 | 1 | 1 | 1 | |
| PCB_ID1 | 0 | 0 | 1 | 1 | 0 | 0 | 1 | 1 | |
| PCB_ID2 | 0 | 1 | 0 | 1 | 0 | 1 | 0 | 1 | |
| HW_Version | 0 (PP0) | A(PP0.5) | B(PP1) | C | D | 1.0(PP2) | 1.1 | MKT | |

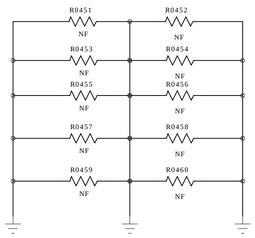


| | | | |
|---|---|---|---|
| TITLE: | <TITLE> | REV: | <REV> |
| DOCUMENT NO.: | 、04_MT6739_BB2 | SIZED: | A1 |
| DEPARTMENT: | Hardware DEPT. | | |
| COMPANY: | WINGTECH | | |
| DESIGNER: <DESIGNER> | Last Saved Date: 2019/4/8 | SHEET: 4 OF 20 | |

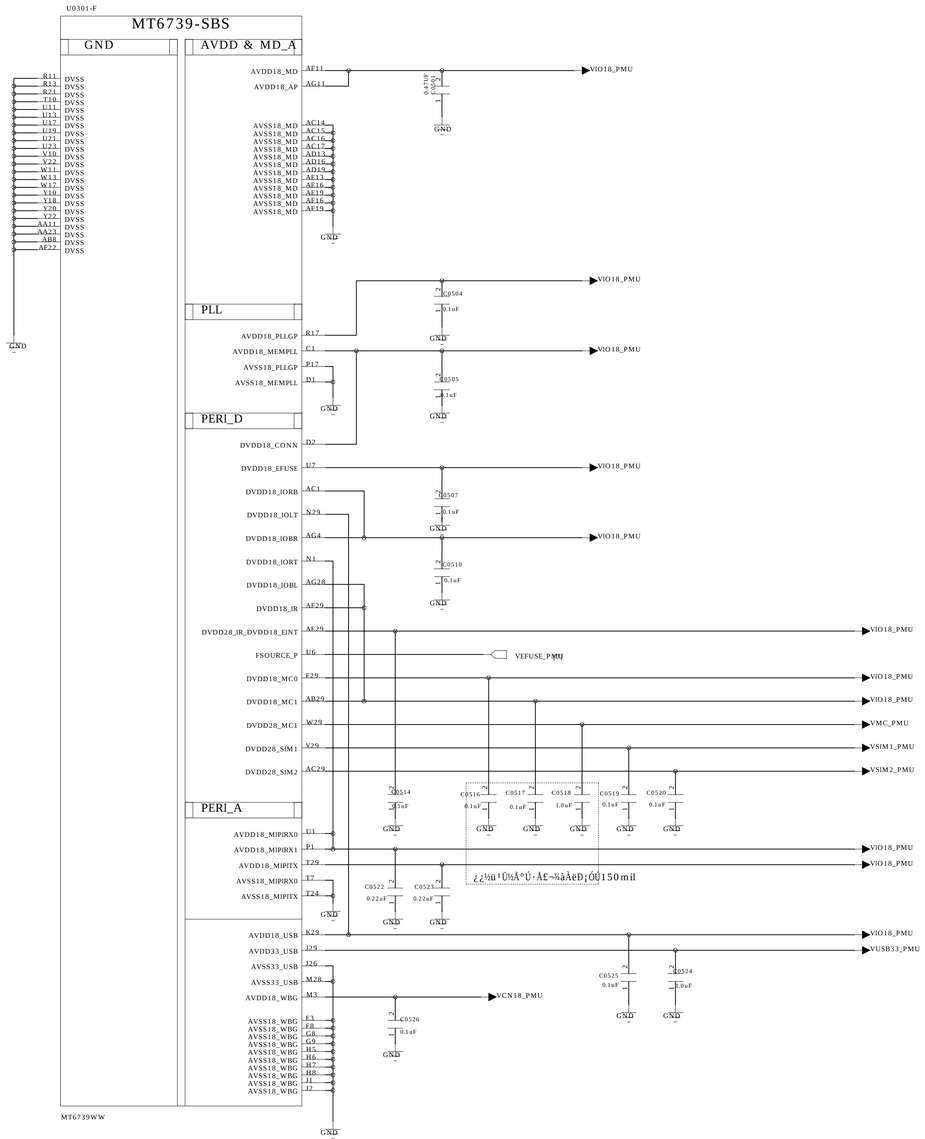


| | | | |
|---|---|---|---|
| TITLE: | <TITLE> | REV: | <REV> |
| DOCUMENT NO.: | 、05_MT6739_BB3 | SIZED: | A1 |
| DEPARTMENT: | Hardware DEPT. | | |
| COMPANY: | WINGTECH | | |
| DESIGNER: <DESIGNER> | Last Saved Date: 2019/4/8 | SHEET: 5 OF 20 | |

# eMMC+LPDDR3

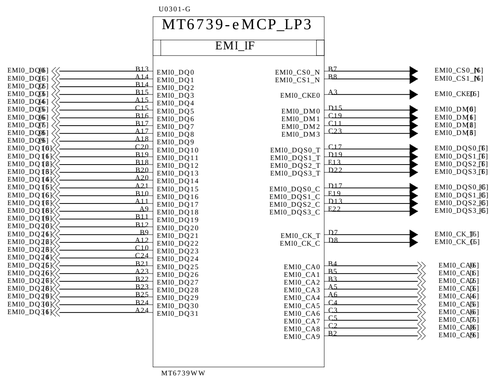


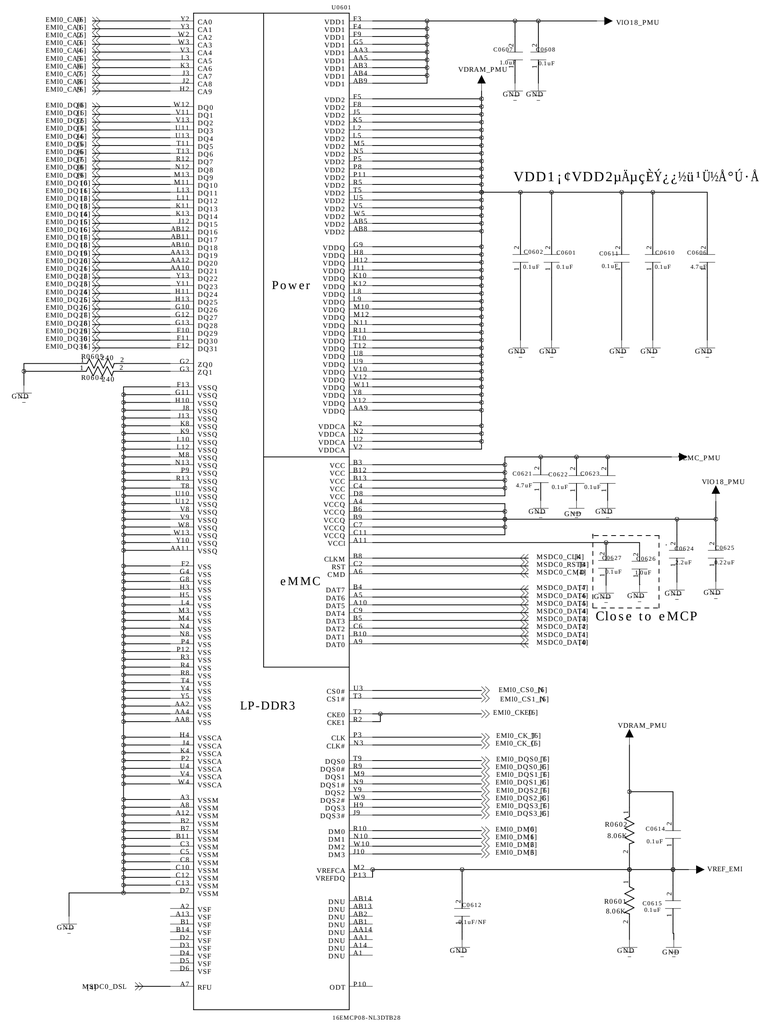


| | | | |
|---|---|---|---|
| TITLE: | <TITLE> | REV: | <REV> |
| DOCUMENT NO.: | 06_EMMC+LPDDR3 | SIZED: | A1 |
| DEPARTMENT: | Hardware DEPT. | | |
| COMPANY: | WINGTECH | | |
| DESIGNER: <DESIGNER> | Last Saved Date: 2019/4/8 | SHEET: 6 OF 20 | |

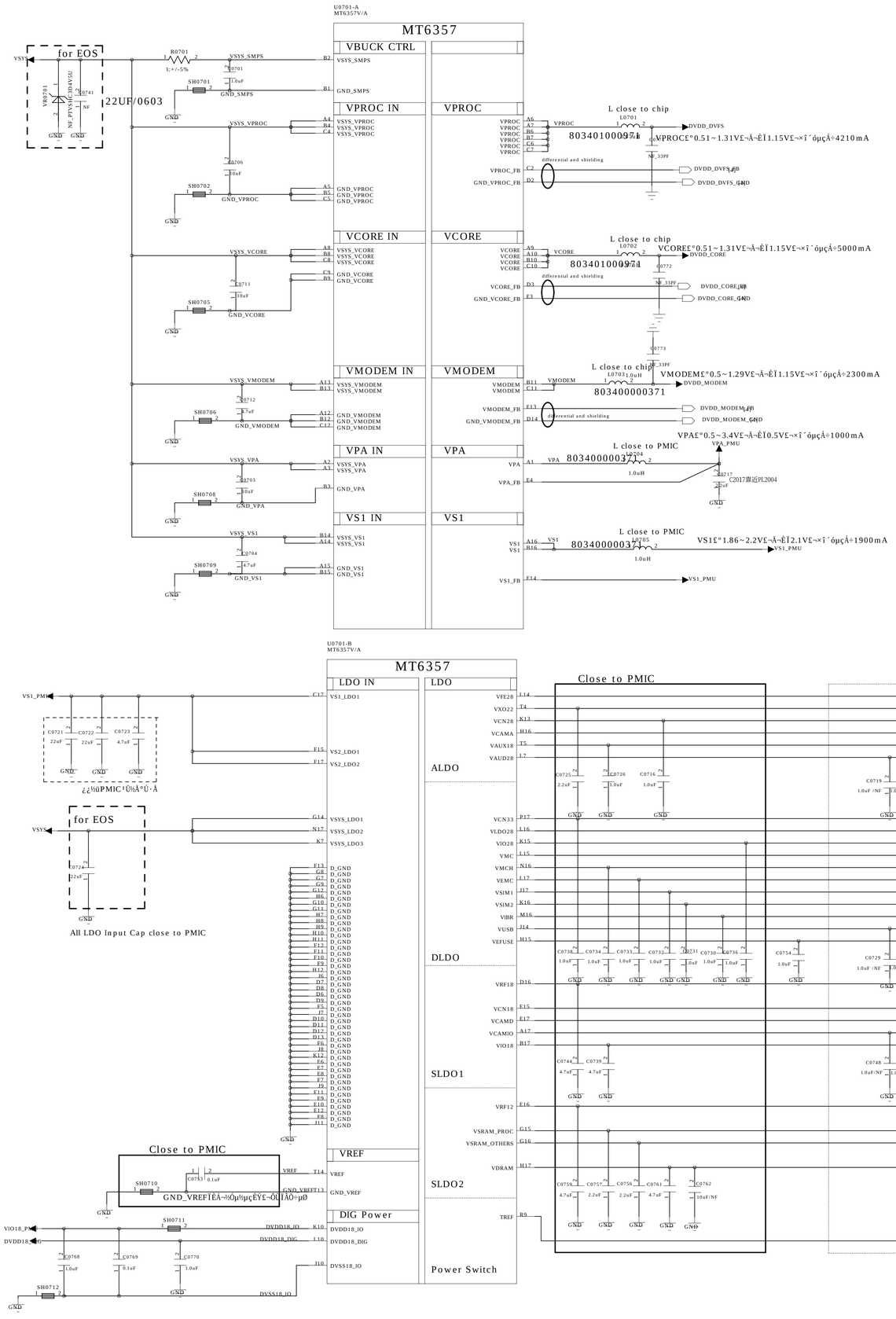


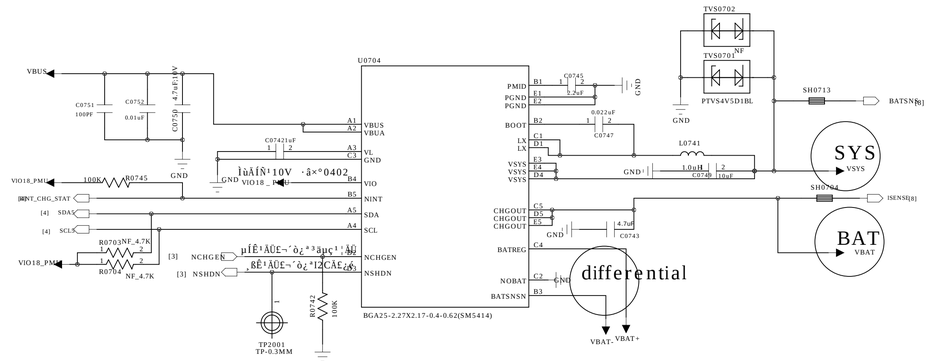


# 快充

## Switching Charger + No Power Path

SM5414W I2C address: 0X49 (Write:0x92, Read:0x93)




| | | | |
|---|---|---|---|
| TITLE: | <TITLE> | REV: | <REV> |
| DOCUMENT NO: | 07_MT6357_BUCK_LDO_CHARGER | SIZED: | A1 |
| DEPARTMENT: | Hardware DEPT. | | |
| COMPANY: | WINGTECH | | |
| DESIGNER: <DESIGNER> | Last Saved Date: 2019/4/8 | SHEET: 7 OF 20 | |

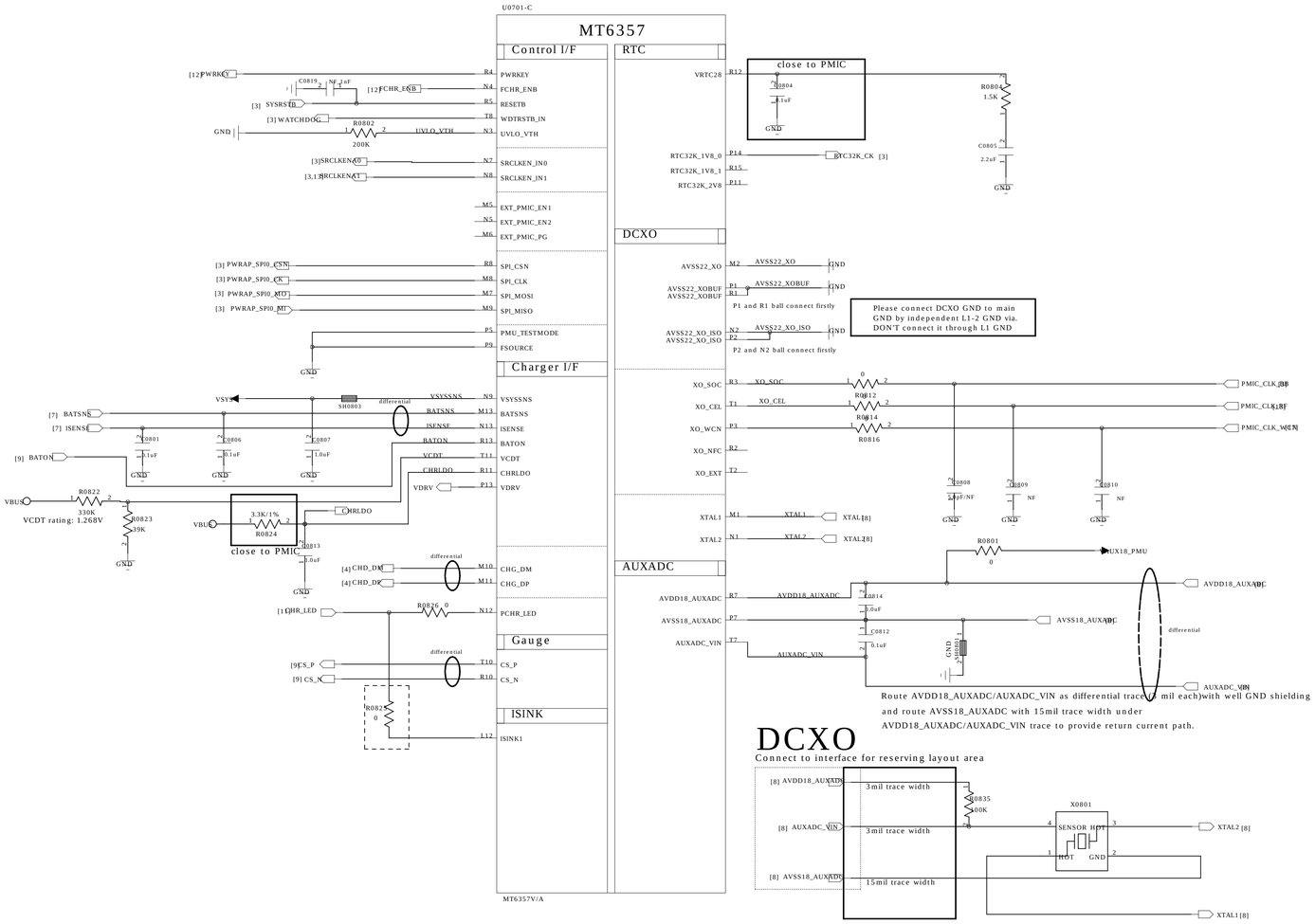


# DCXO

Connect to interface for reserving layout area




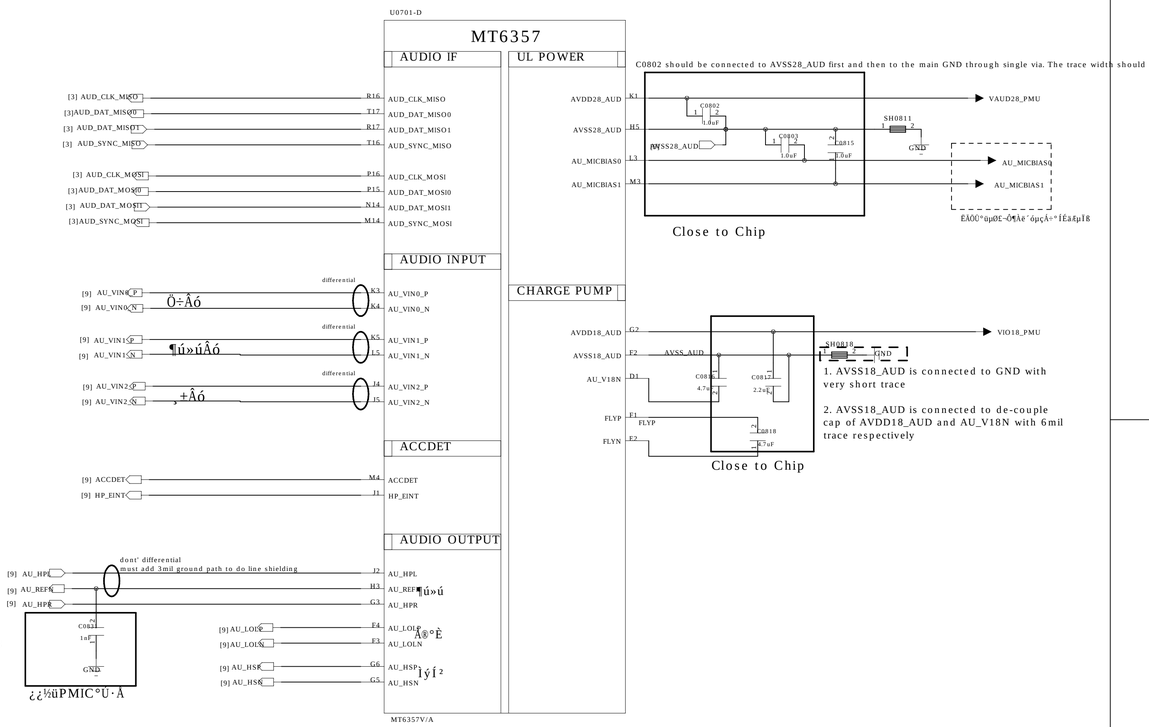


| | | | |
|---|---|---|---|
| TITLE: | <TITLE> | REV: | <REV> |
| DOCUMENT NO.: | 08_MT6357_IF_ADUIO | SIZED: | A1 |
| DEPARTMENT: | Hardware DEPT. | | |
| COMPANY: | WINGTECH | | |
| DESIGNER: <DESIGNER> | Last Saved Date: 2019/4/8 | SHEET: 8 OF 20 | |

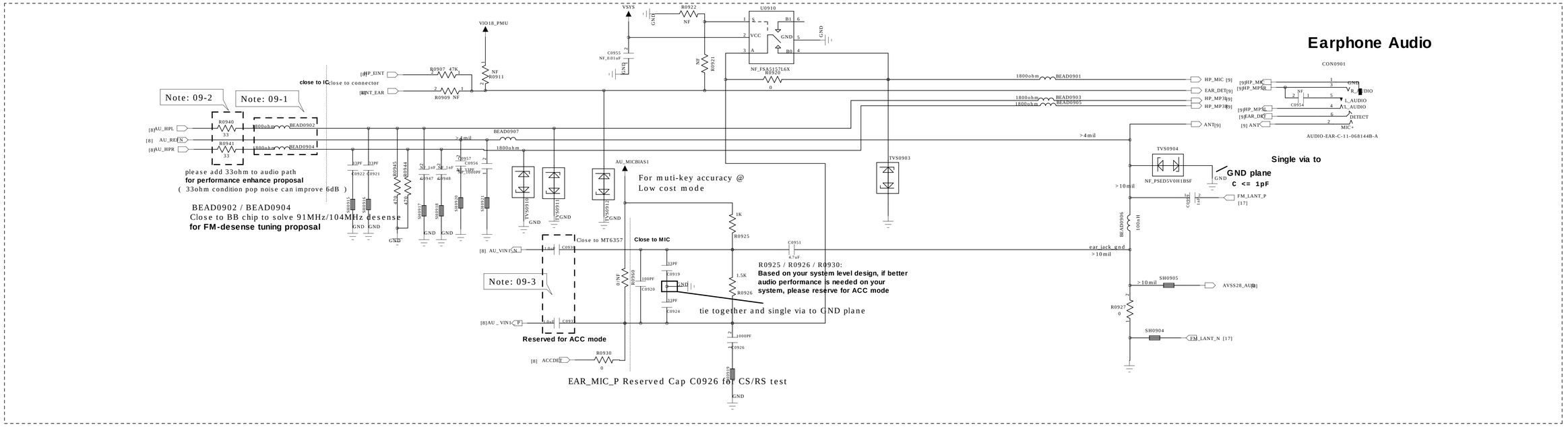


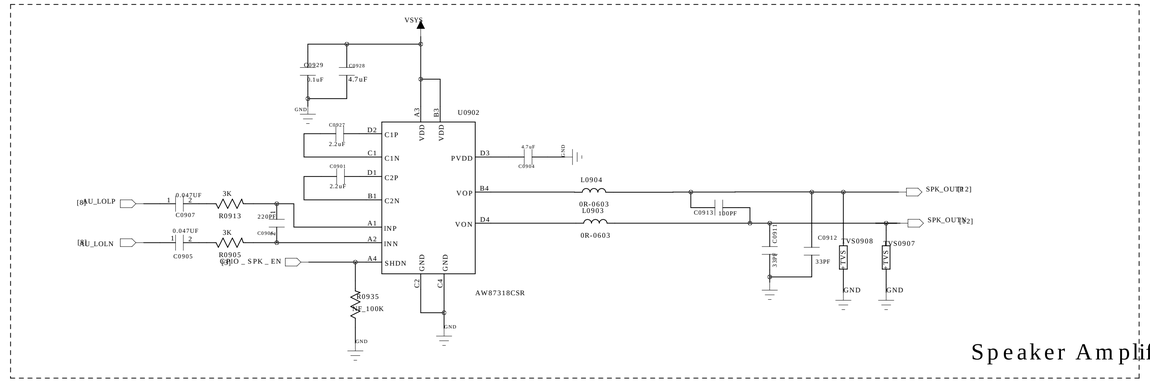


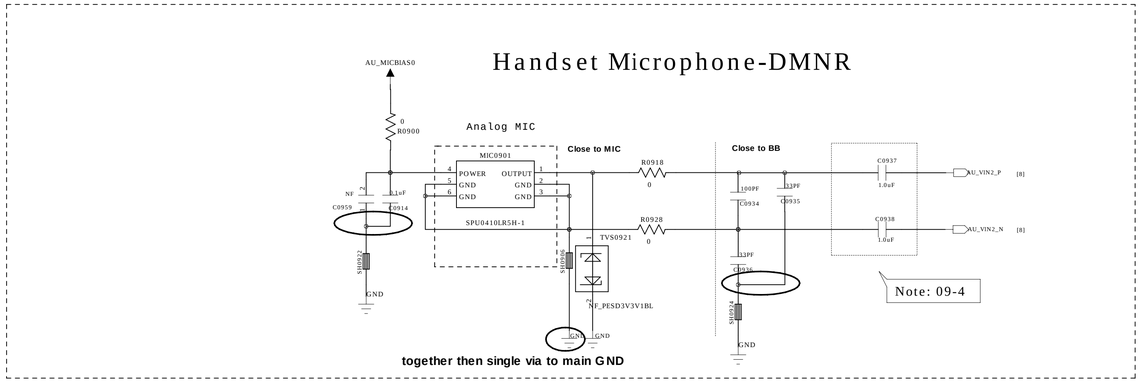


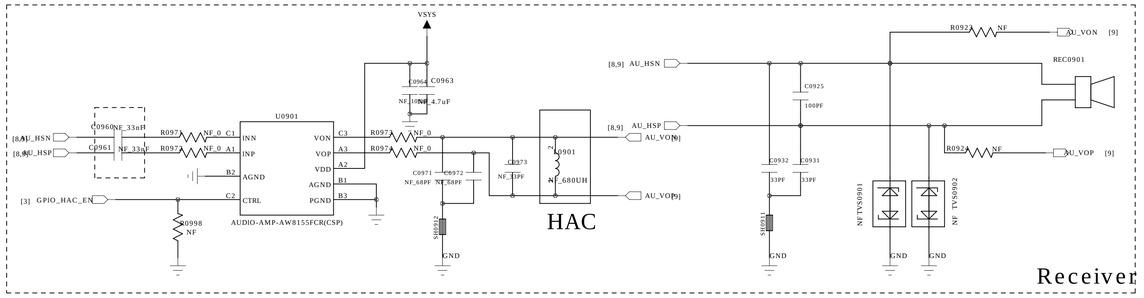


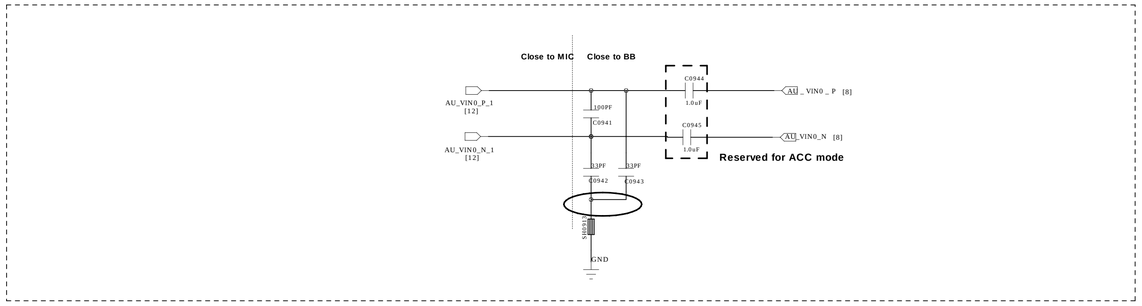


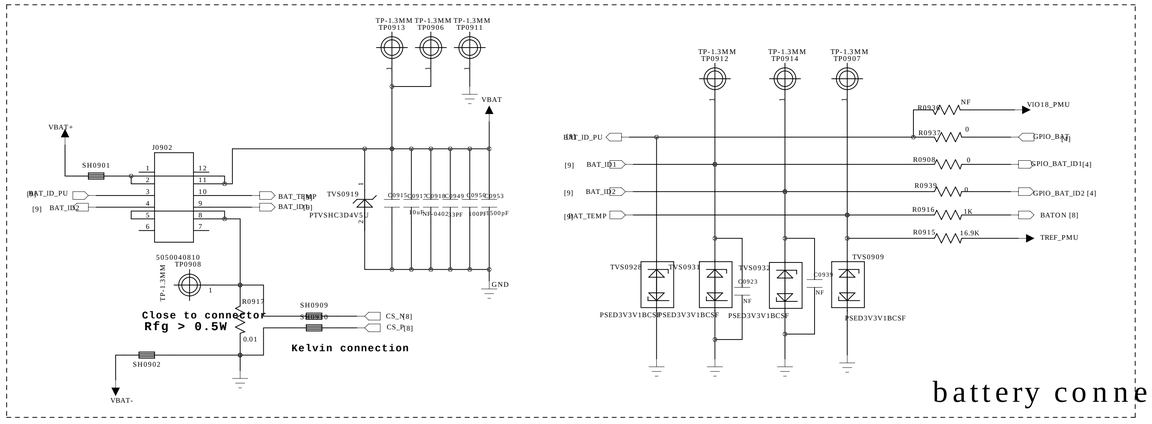


| Earphone Detection Circuit | | | | |
|---|---|---|---|---|
| Mode | R0911 | R0909 | R0909 | R0909 |
| Low Cost Mode | NC | NC | 47K | NC |
| Traditional Mode (ACC) | 470K | 47K | NC | 0R |

| | ACC mode ( Default ) | DCC mode |
|---|---|---|
| C0933 | 1uF | 0 ohm |
| C0930 | 1uF | 0 ohm |
| R0925 | 1K | NC |
| R0926 | 1.5K | NC |
| R0960 | NC | 2.49K |
| C0951 | 4.7uF | 0 ohm |
| R0909 | 0 ohm | NC |

Main Microphone-DMNR

Schematic design notice of "09_AUDIO" page.

Note 09-1: Part # of BEAD6002, BEAD6003, BEAD6004 and BEAD6005 needs changed to "BLM18BD102SN1" for high THD performance (-90dB) but this BOM change will results in FM RSSI 10dB degraded .

Note 09-2: To reserve a resistor in HPL and HPR in series connection both in order to optimize headphone pop noise. The recommended value of this resistor is 33R.

Note 09-3: 0.1/1 uF for ACC mode (1uF for WB_AMR Speech/0.1uF for NB_AMR Speech)
0 ohm for DCC mode

Note 09-4: **1 uF for ACC mode**
**0 ohm for DCC mode**

| | | | |
|---|---|---|---|
| TITLE: | <TITLE> | REV: | <REV> |
| DOCUMENT NO: | 09_AUDIO_BATCONNECTOR | SIZED: | A1 |
| DEPARTMENT: | Hardware DEPT. | | |
| COMPANY: | WINGTECH | | |
| DESIGNER: <DESIGNER> | Last Saved Date: 2019/4/8 | SHEET: | 9 OF 20 |

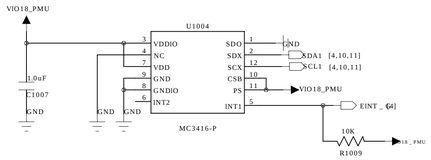


G-SENSOR

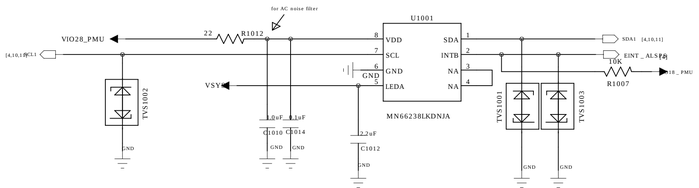


PL-SENSOR

| | | | |
|---|---|---|---|
| TITLE: | <TITLE> | REV: | <REV> |
| DOCUMENT NO: | 10_SENSOR_VIBR_FINGGERPRINT | SIZED: | A1 |
| DEPARTMENT: | Hardware DEPT. | | |
| COMPANY: | WINGTECH | | |
| DESIGNER: <DESIGNER> | Last Saved Date: 2019/4/8 | SHEET: 10 OF 20 | |

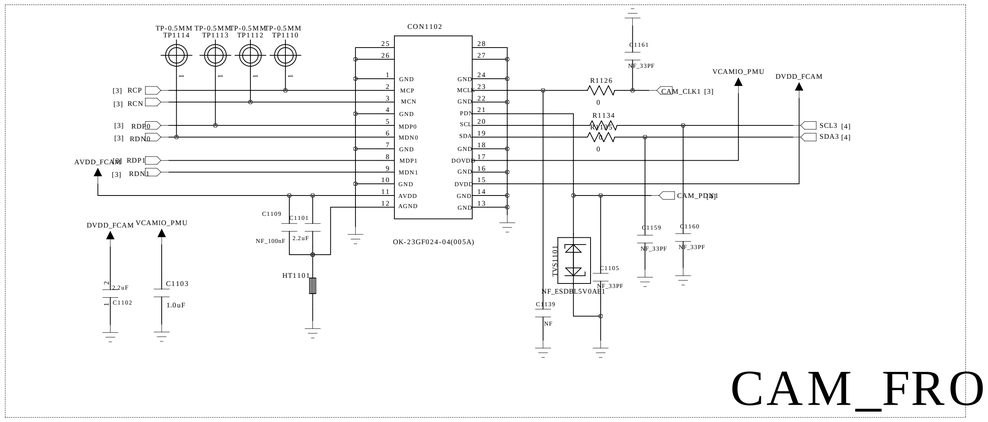


CAM_FRONT

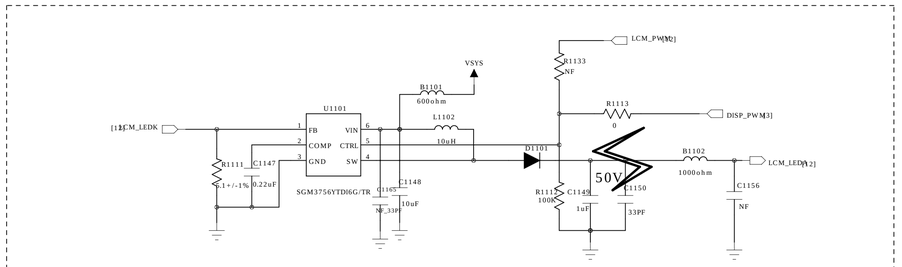


| Serial Number | Vendor No. | Vendor |
|---|---|---|
| 807300000551 | AW9961DNR | AWINIC |
| 807300000651 | SGM3756YTDI6G/TR | SGMC |

LCM_BL

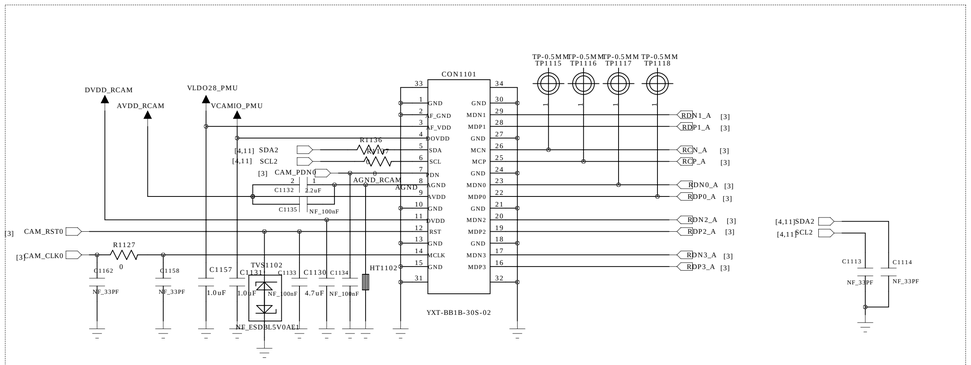


CAM_REAR

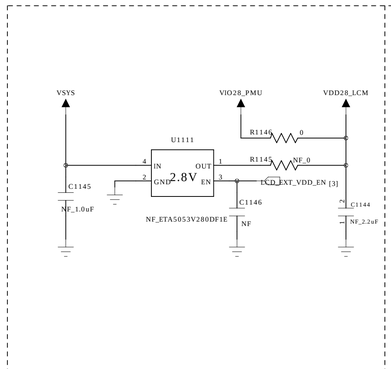


LCM_EXT_LDO

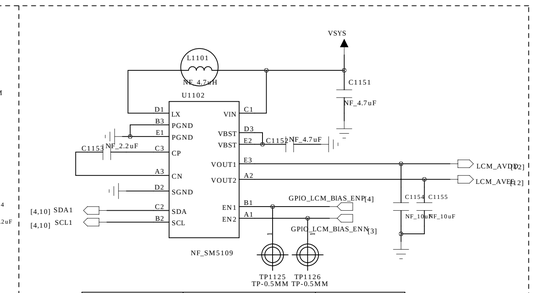


| Serial Number | Vendor No. | Vendor |
|---|---|---|
| 807200000661 | SM5109 | SMI |
| | OCP2130 | OCS |

LCM_BIAS

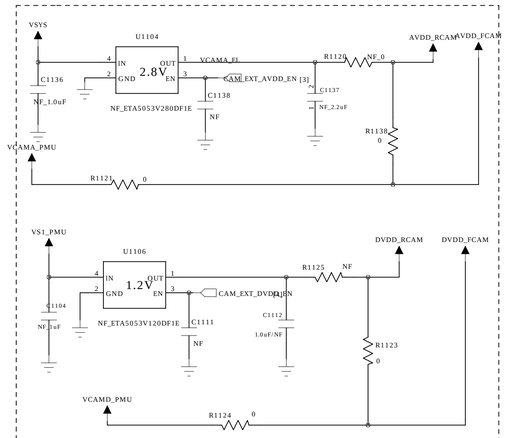


CAM_POWER

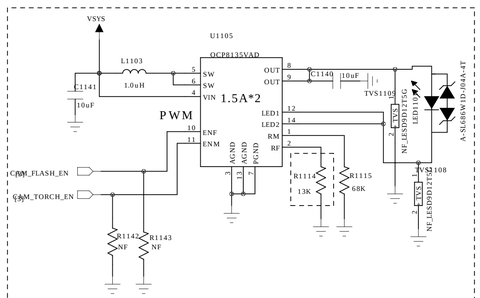


| Serial Number | Vendor No. | Vendor |
|---|---|---|
| 807300000581 | OCP8132AVAD | OCS |
| 807300000461 | SYWT78DUC | SILERGY |

FLASH_LED

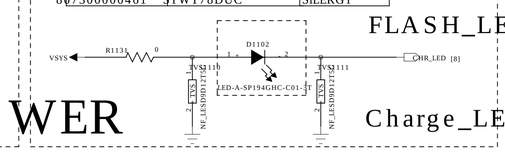


Charge_LED

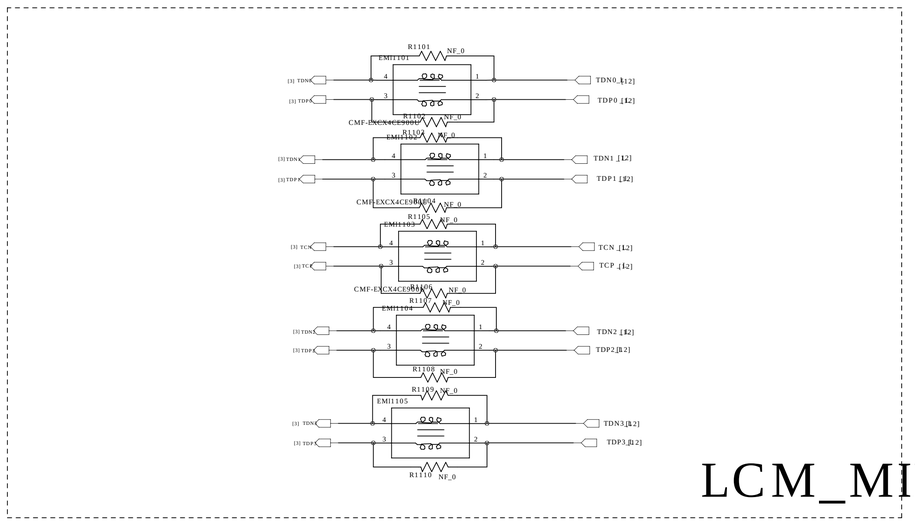


LCM_MIPI

| | | | |
|---|---|---|---|
| TITLE: | <TITLE> | REV: | <REV> |
| DOCUMENT NO: | LCD_CAMERA_FLASH_INDICATOR | SIZED: | A1 |
| DEPARTMENT: | Hardware DEPT. | | |
| COMPANY: | WINGTECH | | |
| DESIGNER: <DESIGNER> | Last Saved Date: 2019/4/8 | SHEET: | 11 OF 20 |

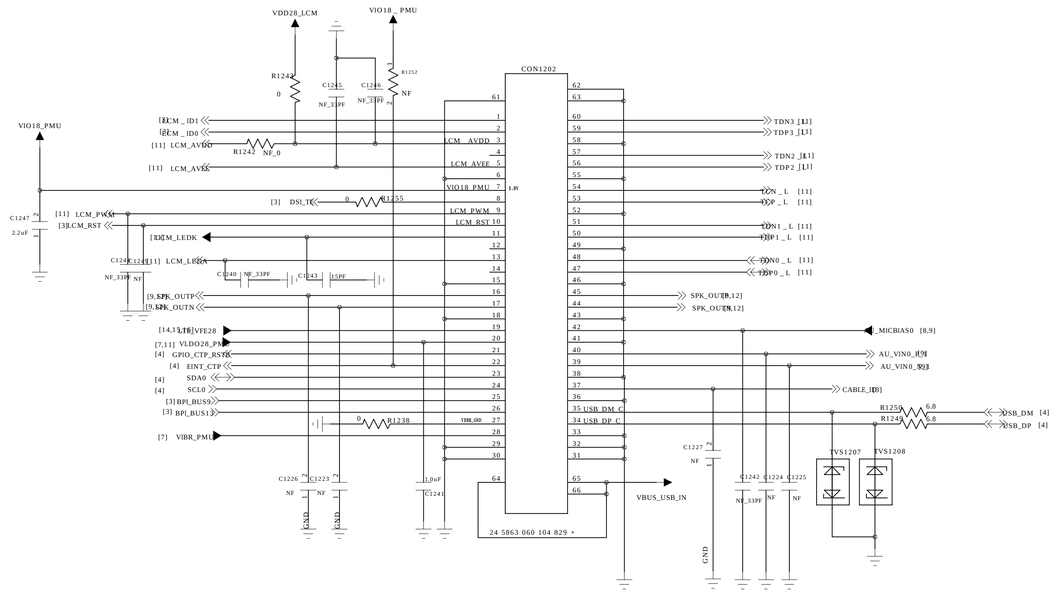


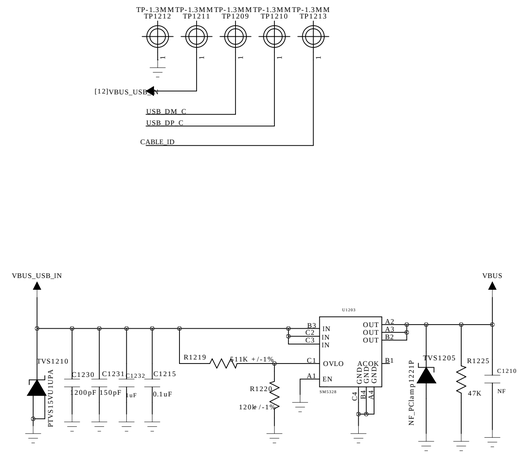


SUB_IO

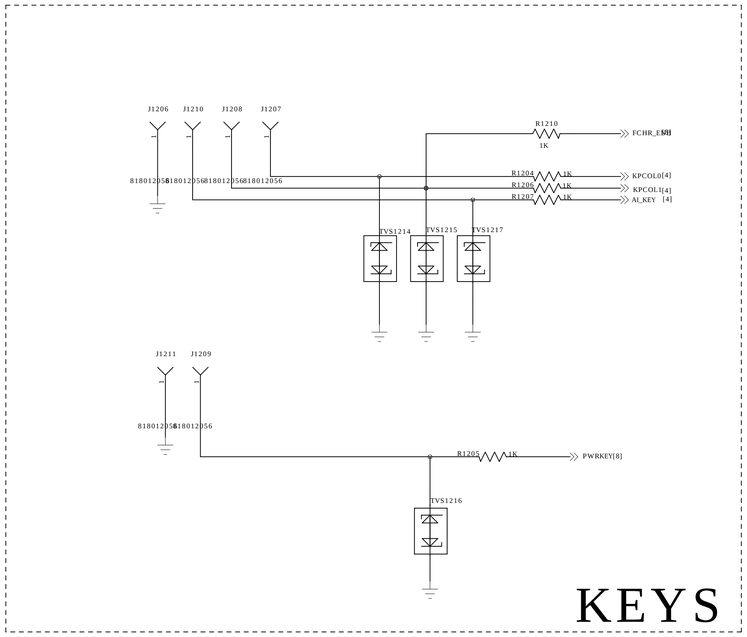


KEYS

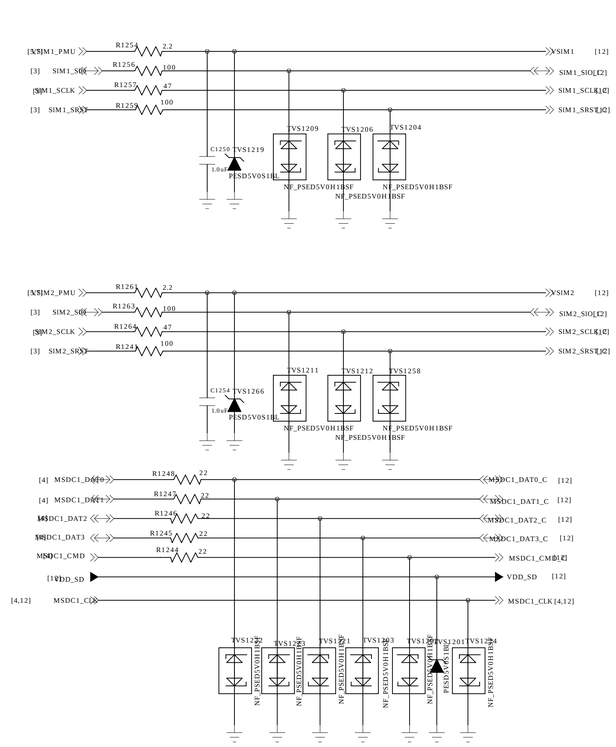


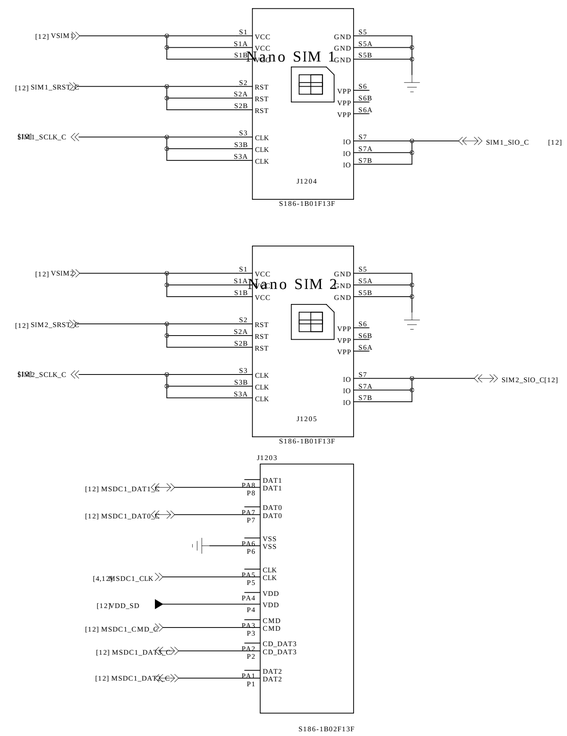


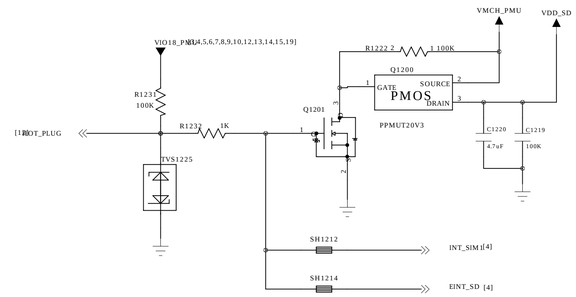


SIM1+SIM2+SD

| | | | |
|---|---|---|---|
| TITLE: | <TITLE> | REV: | <REV> |
| DOCUMENT NO: | 12_SIM_SD_SIDEKEY_CONNECTOR | SIZED: | A1 |
| DEPARTMENT: | Hardware DEPT. | | |
| COMPANY: | WINGTECH | | |
| DESIGNER: <DESIGNER> | Last Saved Date: 2019/4/8 | SHEET: 12 OF 20 | |

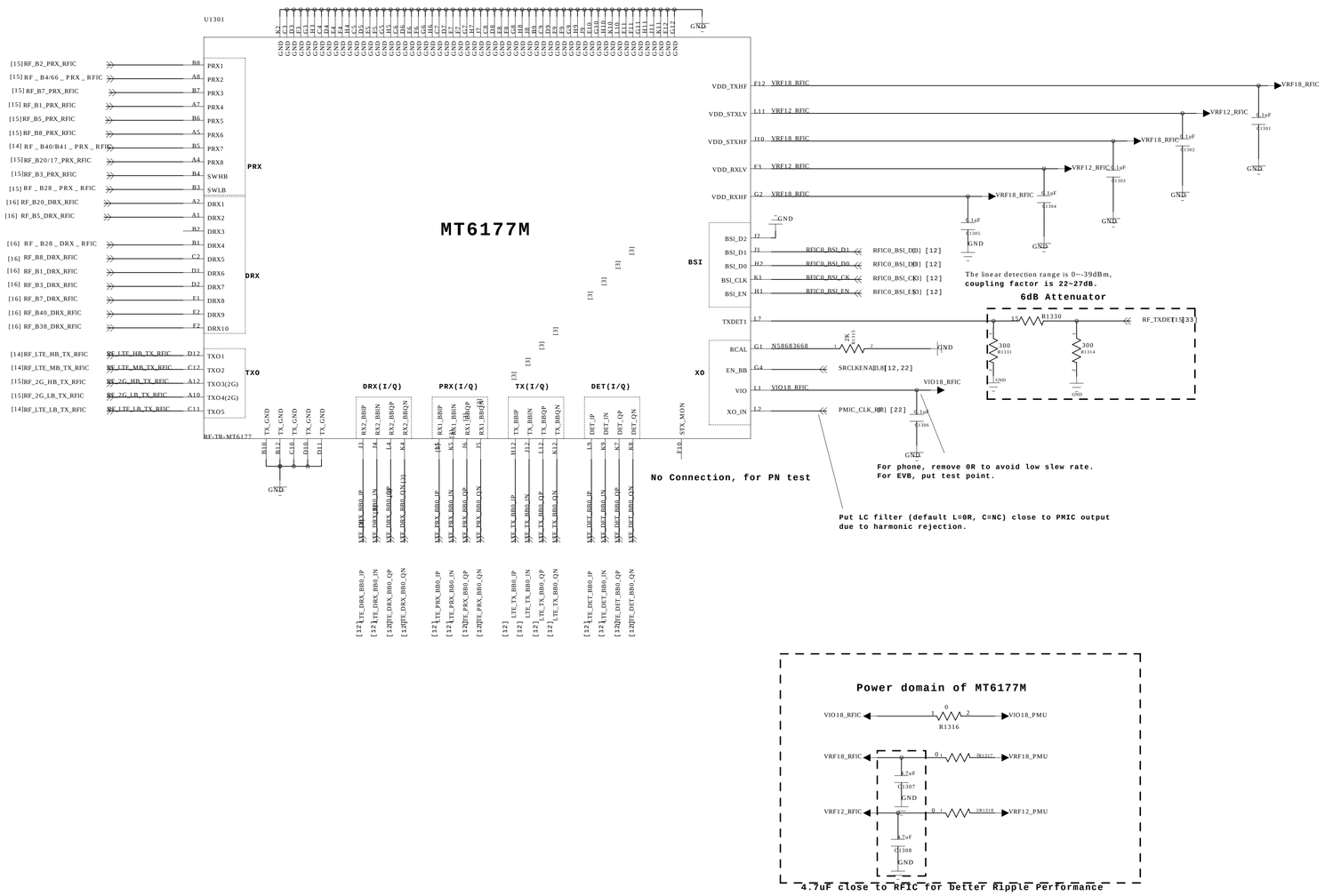


| | | | |
|---|---|---|---|
| TITLE: | <TITLE> | REV: | <REV> |
| DOCUMENT NO.: | 13_TRANCEIVER | SIZED: | A1 |
| DEPARTMENT: | Hardware DEPT. | | |
| COMPANY: | WINGTECH | | |
| DESIGNER: <DESIGNER> | Last Saved Date: 2019/4/8 | SHEET: 13 OF 20 | |

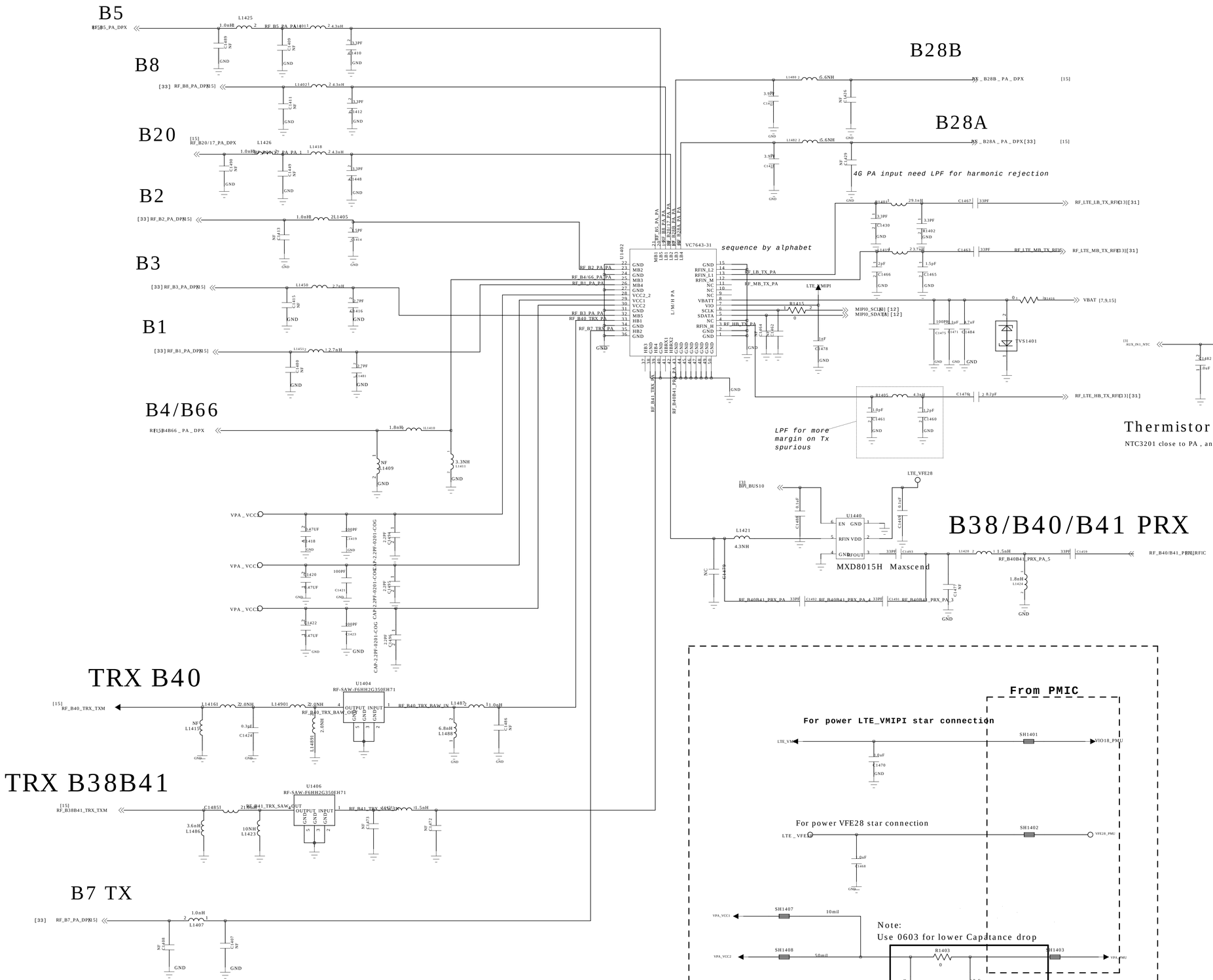


Thermistor / To sense board level temperatur

NTC3201 close to PA , and located in the same layer

| | | | |
|---|---|---|---|
| TITLE: | <TITLE> | REV: | <REV> |
| DOCUMENT NO.: | 14_PA_TX | SIZED: | A1 |
| DEPARTMENT: | Hardware DEPT. | | |
| COMPANY: | WINGTECH | | |
| DESIGNER: <DESIGNER> | Last Saved Date: 2019/4/8 | SHEET: | 14 OF 20 |

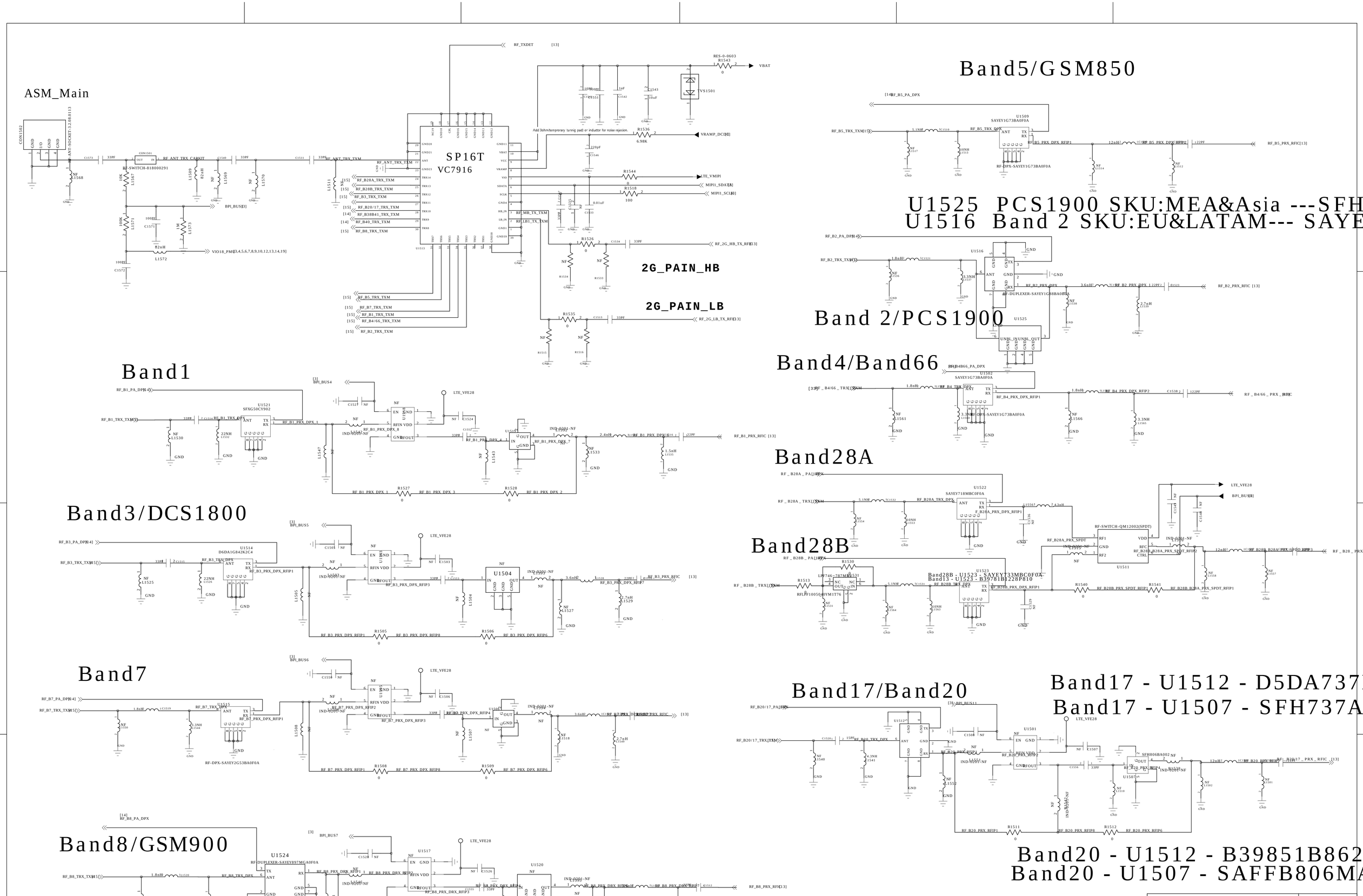


| | | | |
|---|---|---|---|
| TITLE: | <TITLE> | REV: | <REV> |
| DOCUMENT NO.: | 15_PRX | SIZED: | A1 |
| DEPARTMENT: | Hardware DEPT. | | |
| COMPANY: | WINGTECH | | |
| DESIGNER: <DESIGNER> | Last Saved Date: 2019/4/8 | SHEET: 15 OF 20 | |

Diversity-ANT SP12T ASM

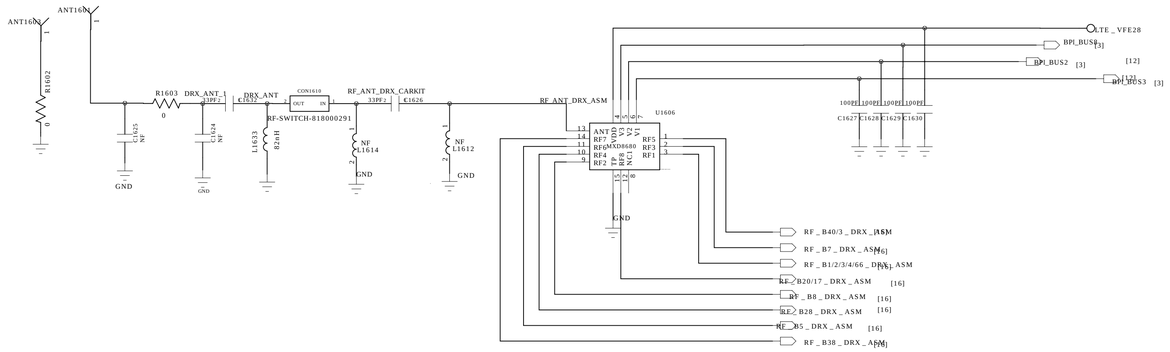


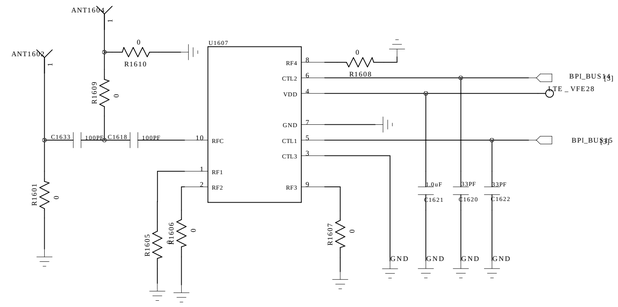


# EU&MEA&Asia 1/3 --- SAWFD1G84AA0F0A
# LATAM 2/66 --- SAWFD1G96AA3F0A

## B1/2/3/4/66 DRX

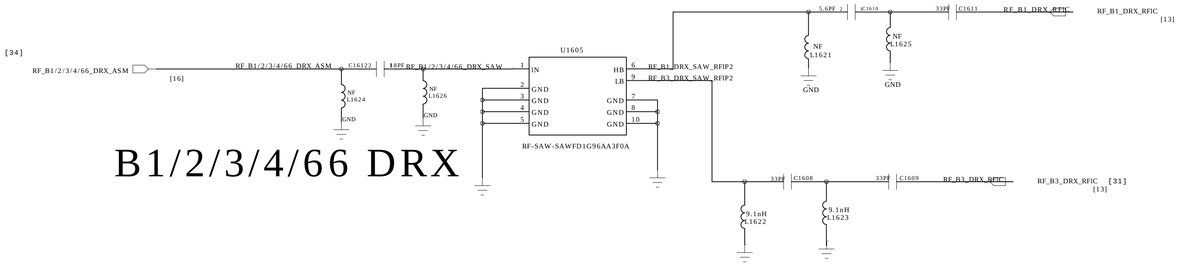


## B5 DRX

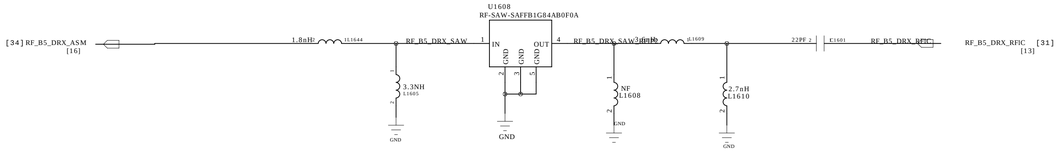


## B7 DRX

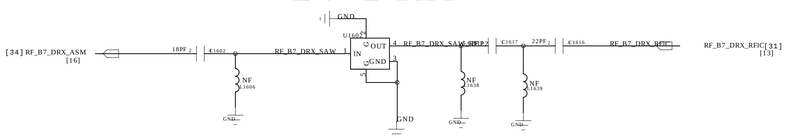


## B8 DRX

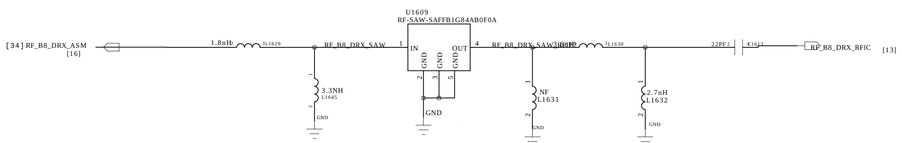


## B17/B20 DRX

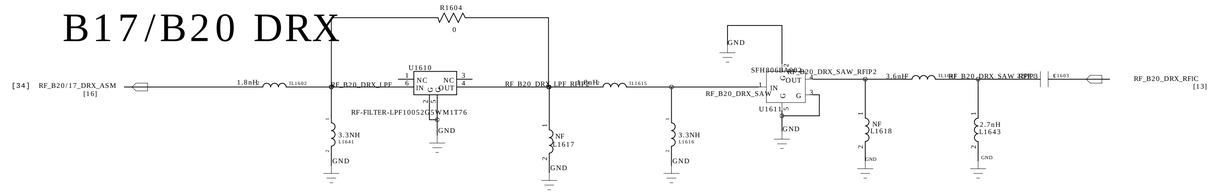


## B28 DRX

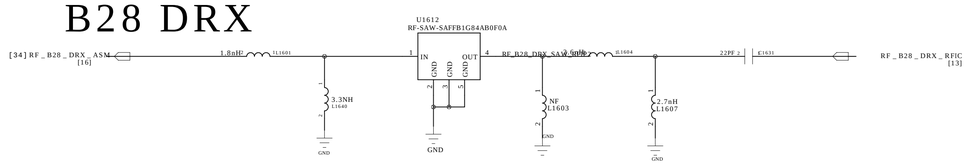


## B38/41 DRX

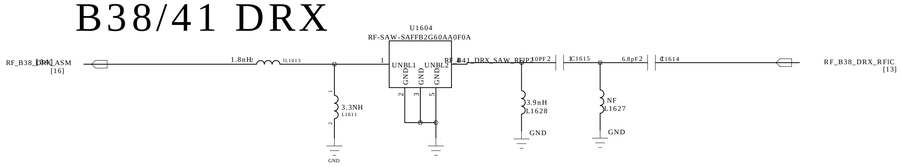


# LATAM B3
# B3/B40 DRX

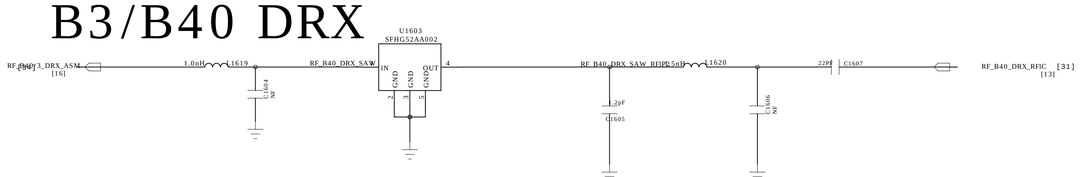


| | | | |
|---|---|---|---|
| TITLE: | <TITLE> | REV: | <REV> |
| DOCUMENT NO.: | 16_DRX | SIZED: | A1 |
| DEPARTMENT: | Hardware DEPT. | | |
| COMPANY: | WINGTECH | | |
| DESIGNER: <DESIGNER> | Last Saved Date: 2019/4/8 | SHEET: 16 OF 20 | |

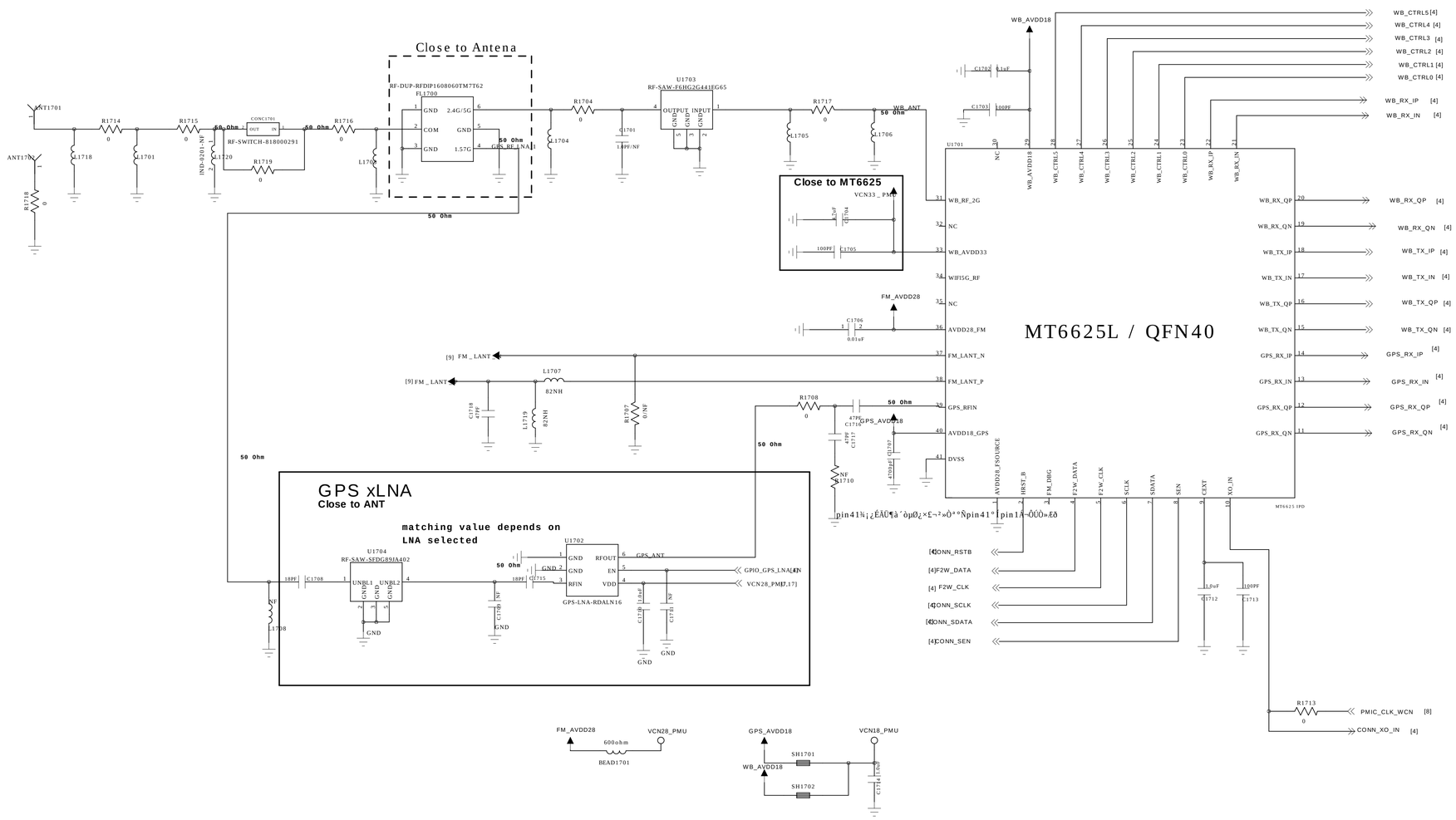


| | | | |
|---|---|---|---|
| TITLE: | <TITLE> | REV: | <REV> |
| DOCUMENT NO.: | 17_WCN | SIZED: | A1 |
| DEPARTMENT: | Hardware DEPT. | | |
| COMPANY: | WINGTECH | | |
| DESIGNER: <DESIGNER> | Last Saved Date: 2019/4/8 | SHEET: 17 OF 20 | |

# MARK

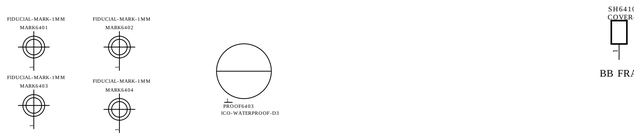


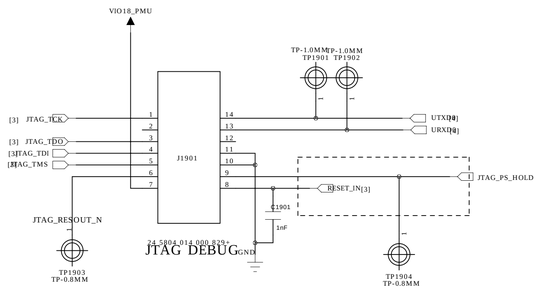


# JTAG CONNECTOR

| | | | |
|---|---|---|---|
| TITLE: | <TITLE> | REV: | <REV> |
| DOCUMENT NO.: | 19_MARK | SIZED: | A1 |
| DEPARTMENT: | Hardware DEPT. | | |
| COMPANY: | WINGTECH | | |
| DESIGNER: <DESIGNER> | Last Saved Date: 2019/4/8 | SHEET: 19 OF 20 | |

**U0301_MT6739WW_BB chip IC , Digital Baseband Processor(Top)**

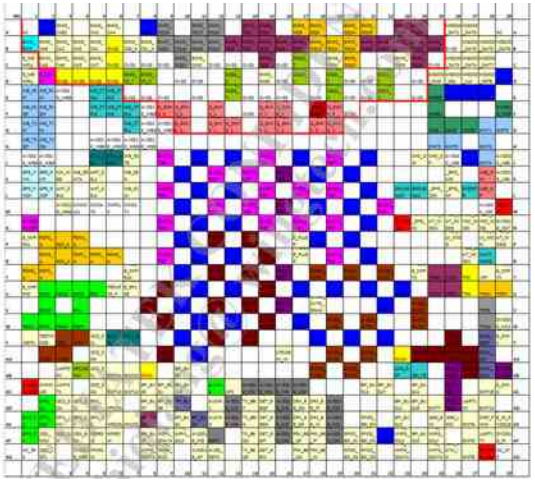

**U0601_16EMCP08-NL3DTB28,IC,MCP. eMMC+LPDDR3(Top)**

| | 1 | 2 | 3 | 4 | 5 | 6 | 7 | 8 | 9 | 10 | 11 | 12 | 13 | 14 | |
|---|---|---|---|---|---|---|---|---|---|---|---|---|---|---|---|
| A | DNU | NC | VSSm | VCCQ | DAT6 | CMD | DS | VSSm | DAT0 | DAT5 | VDD | VSSm | NC | DNU | A |
| B | NC | VSSm | VCC | DAT7 | DAT3 | VCCQ | VSSm | CLK | VCCQ | DAT1 | VSSm | VCC | VCC | NC | B |
| C | | RST_n | VSSm | VCC | VSSm | DAT2 | VCCQ | VSSm | DAT4 | VSSm | VCCQ | VSSm | VSSm | | C |
| D | | NC | NC | NC | NC | NC | VSSm | VCC | | | | | | | D |
| E | | | | | | | | | | | | | | | E |
| F | | VSS | VDD1 | VDD1 | VDD2 | | | VDD2 | VDD1 | DQ29 | DQM3 | DQ31 | VSS | | F |
| G | | ZQ0 | NC | VSS | VDD1 | | | VSS | VDDQ | DQ26 | VSS | DQ27 | DQ28 | | G |
| H | | CA9 | VSS | VSS | VSS | | | VDDQ | DQS3_t | VSS | DQ24 | VDDQ | DQ25 | | H |
| J | | CA8 | CA7 | VSS | VDD2 | | | VSS | DQS3_c | DM3 | VDDQ | DQ15 | VSS | | J |
| K | | VDDCA | CA6 | VSS | VDD2 | | | VSS | VSS | VDDQ | DQ13 | VDDQ | DQ14 | | K |
| L | | VDD2 | CA5 | VSS | VDD2 | | | VDDQ | VDDQ | VSS | DQ12 | VSS | DQ11 | | L |
| M | | VREF (CA) | VSS | VSS | VDD2 | | | VSS | DQS1_t | VDDQ | DQ10 | VDDQ | DQ9 | | M |
| N | | VDDCA | CK_c | VSS | VDD2 | | | VSS | DQS1_c | DM1 | VDDQ | DQ8 | VSS | | N |
| P | | VSS | CK_t | VSS | VDD2 | | | VDD2 | VSS | ODT | VDD2 | VSS | VREF (DQ) | | P |
| R | | CKE1 | VSS | VSS | VDD2 | | | VSS | DQS0_c | DM0 | VDDQ | DQ7 | VSS | | R |
| T | | CKE0 | CS1_n | VSS | VDD2 | | | VSS | DQS0_t | VDDQ | DQ5 | VDDQ | DQ6 | | T |
| U | | VDDCA | CS0_n | VSS | VDD2 | | | VDDQ | VDDQ | VSS | DQ3 | VSS | DQ4 | | U |
| V | | VDDCA | CA4 | VSS | VDD2 | | | VSS | VSS | VDDQ | DQ1 | VDDQ | DQ2 | | V |
| W | | CA2 | CA3 | VSS | VDD2 | | | VSS | DQS2_c | DM2 | VDDQ | DQ0 | VSS | | W |
| Y | | CA0 | CA1 | VSS | VSS | | | VDDQ | DQS2_t | VSS | DQ23 | VDDQ | DQ22 | | Y |
| AA | DNU | VSS | VDD1 | VSS | VDD1 | | | VSS | VDDQ | DQ21 | VSS | DQ20 | DQ19 | DNU | AA |
| AB | DNU | DNU | VDD1 | VDD1 | VDD2 | | | VDD2 | VDD1 | DQ18 | DQ17 | DQ16 | DNU | DNU | AB |
| | 1 | 2 | 3 | 4 | 5 | 6 | 7 | 8 | 9 | 10 | 11 | 12 | 13 | 14 | |

**U0701_MT6357_IC,PMIC (Top)**

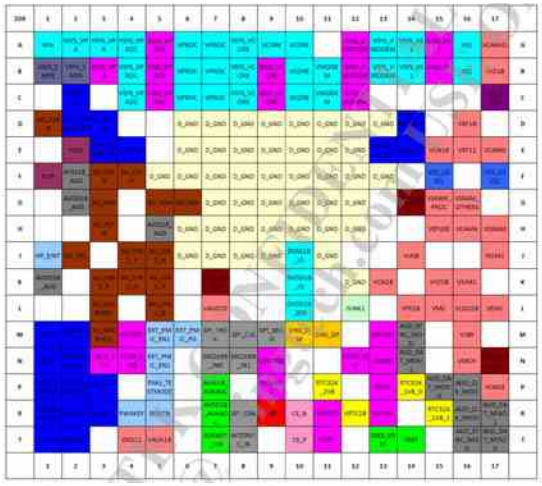

LG-model name-MAIN Board_TOP

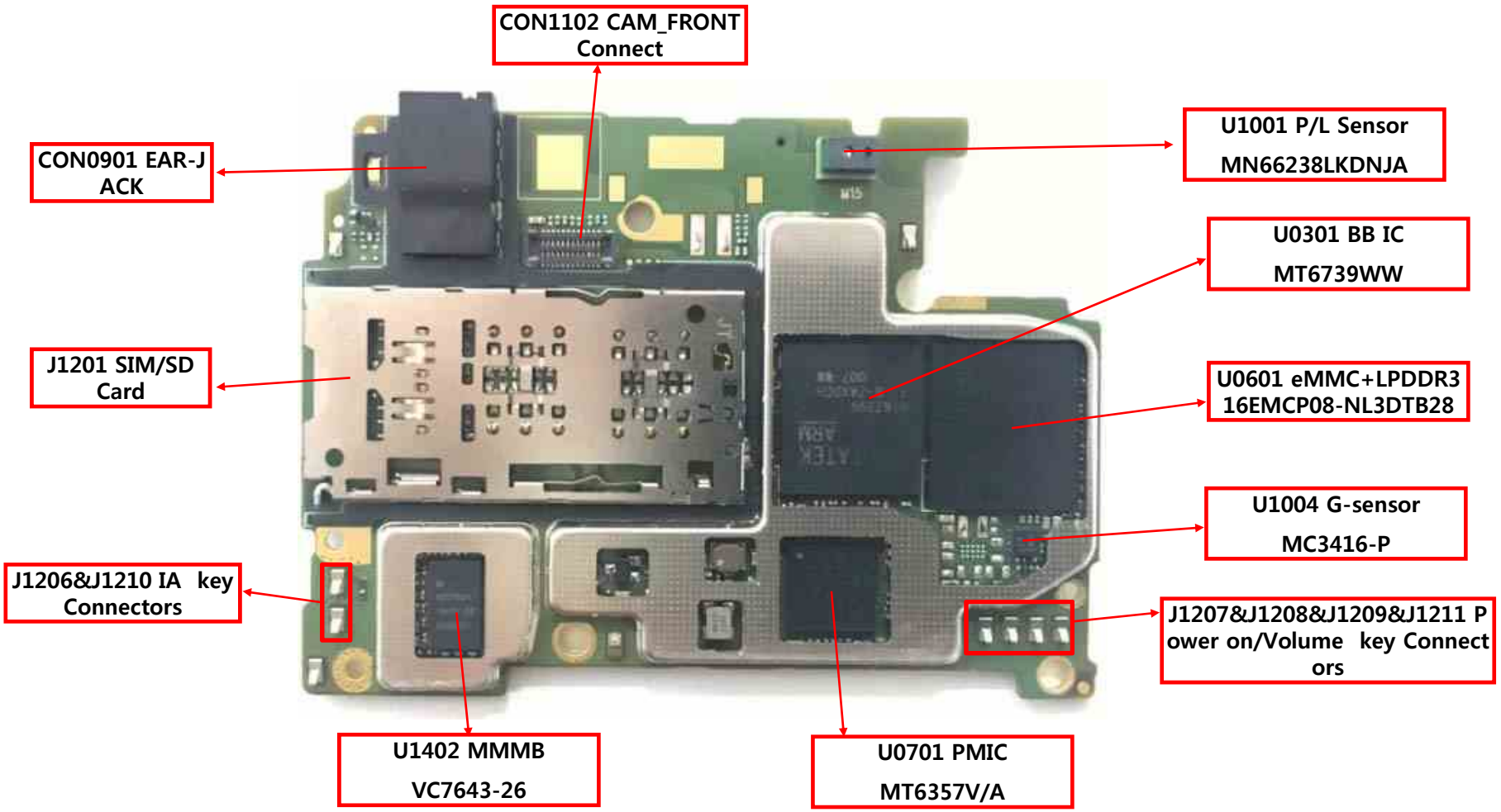



Copyright © 2019 LG Electronics. Inc. All right reserved.
Only training and service purposes

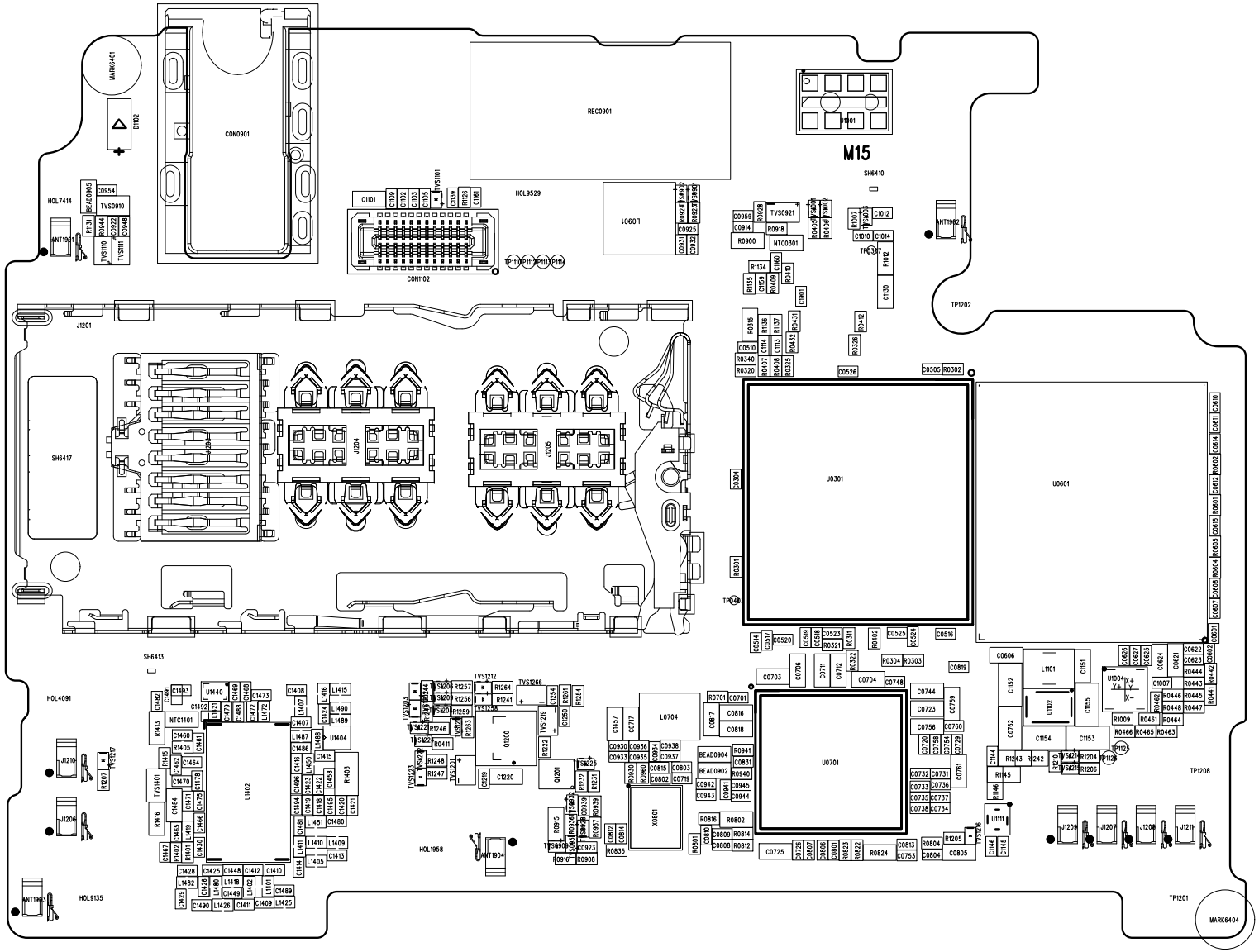
M15
MARK6401
CON0901
REC0901
U1101
SH6410
HOL7414
HOL9529
L0901
CON1102
ANT1901
ANT1902
TP1202
J1201
SH6417
J1203
J1204
J1205
U0301
U0601
SH6413
HOL4091
U1402
U1404
Q0200
Q1201
L0704
U0701
X0801
L1101
U1102
U1004
HOL1958
ANT1904
J1209
J1206
J1207
J1208
J1210
J1211
TP1208
HOL9135
ANT1903
TP1201
MARK6404

LG-model name-MAIN Board_BOT

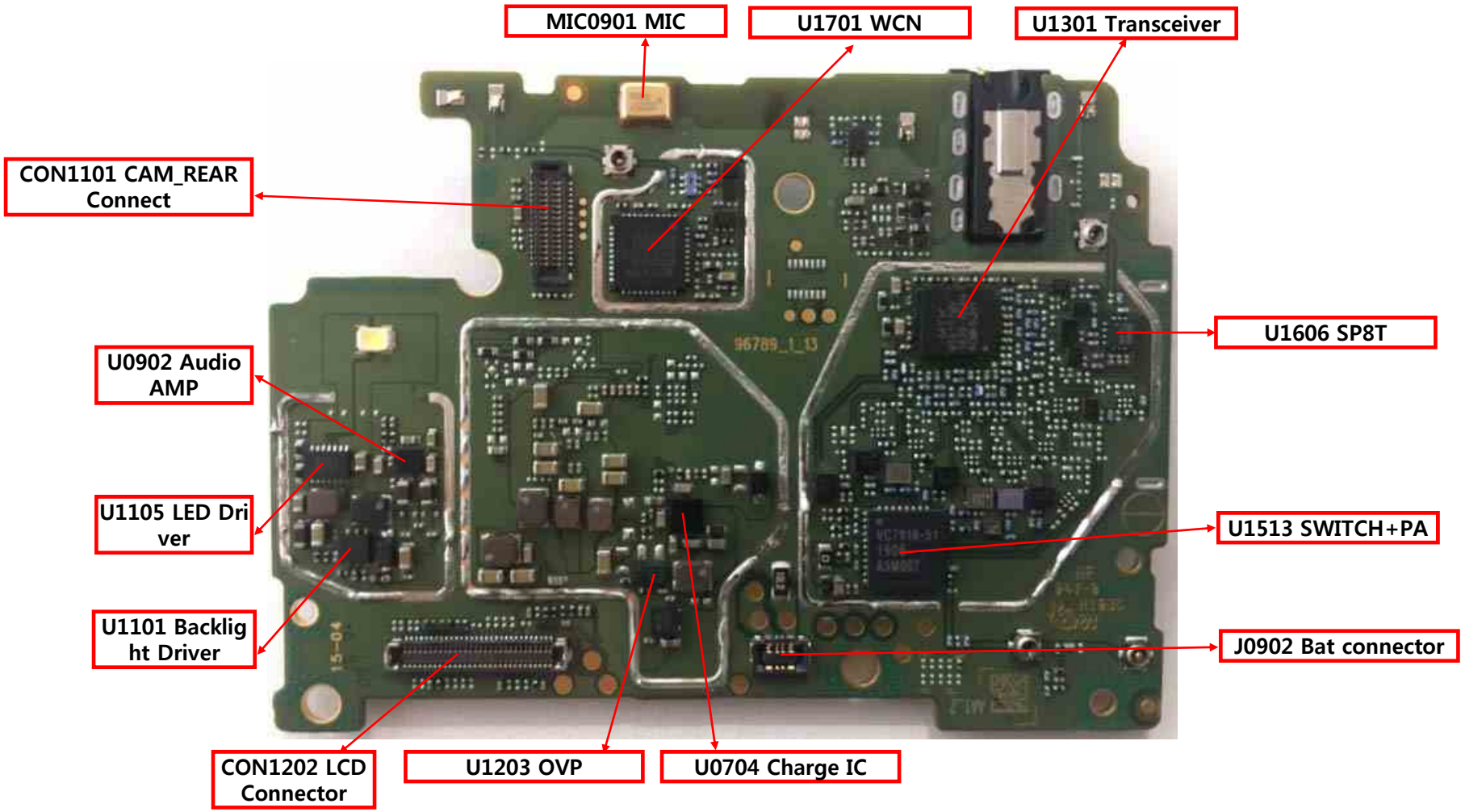




Copyright © 2019 LG Electronics. Inc. All right reserved.
Only training and service purposes

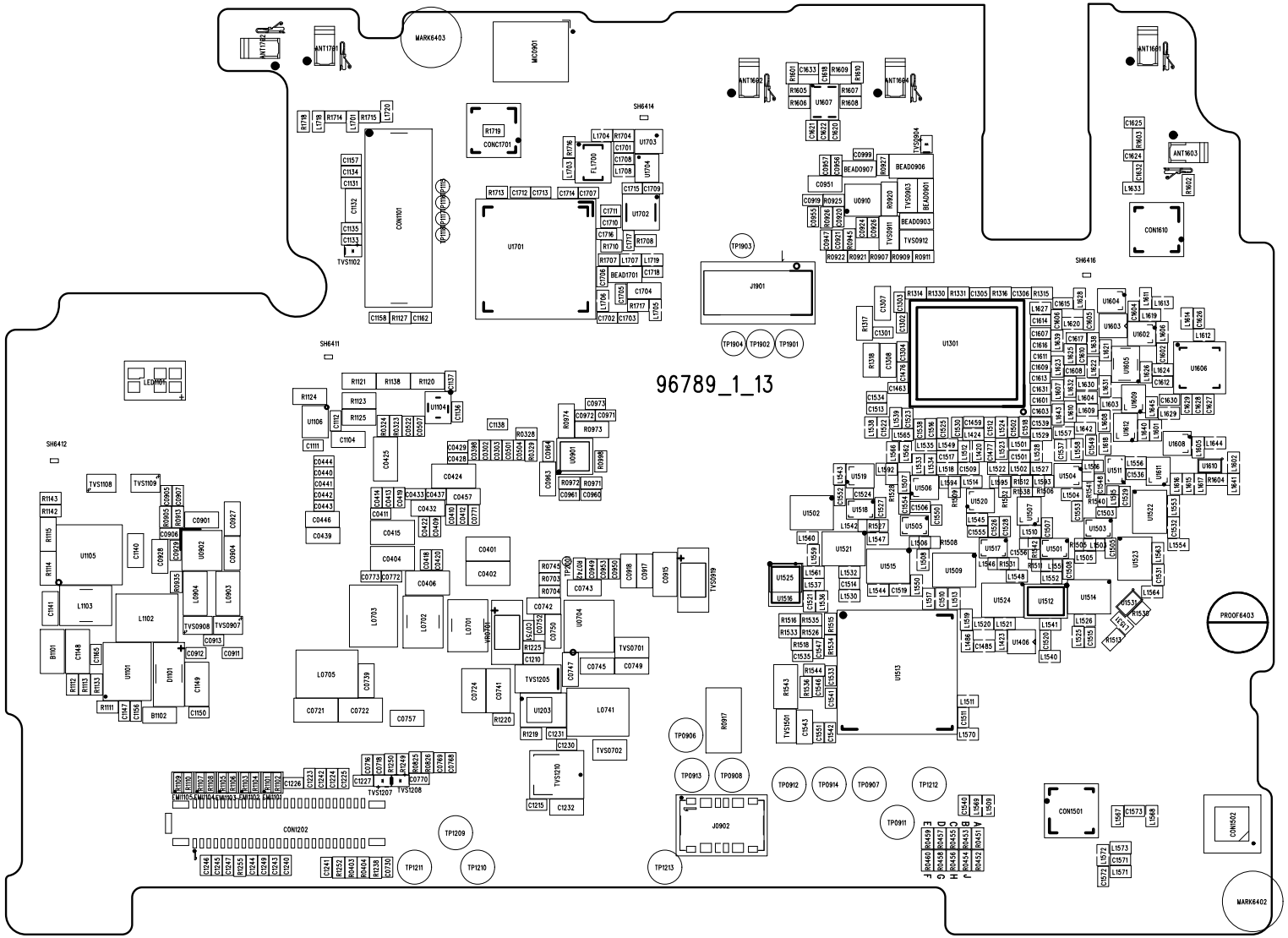
96789_1_13
MARK6403
MARK6402
PROOF6403
MC0901
CON1101
CON1202
CON1501
CON1502
CON1610
U1301
U1701
J1901
J0902
SH6414
SH6416
SH6411
SH6412
TP1903
TP1904
TP1902
TP1901
TP1209
TP1210
TP1211
TP1212
TP1213
TP0906
TP0913
TP0908
TP0912
TP0914
TP0907
TP0911

LG-model name-SUB Board_TOP

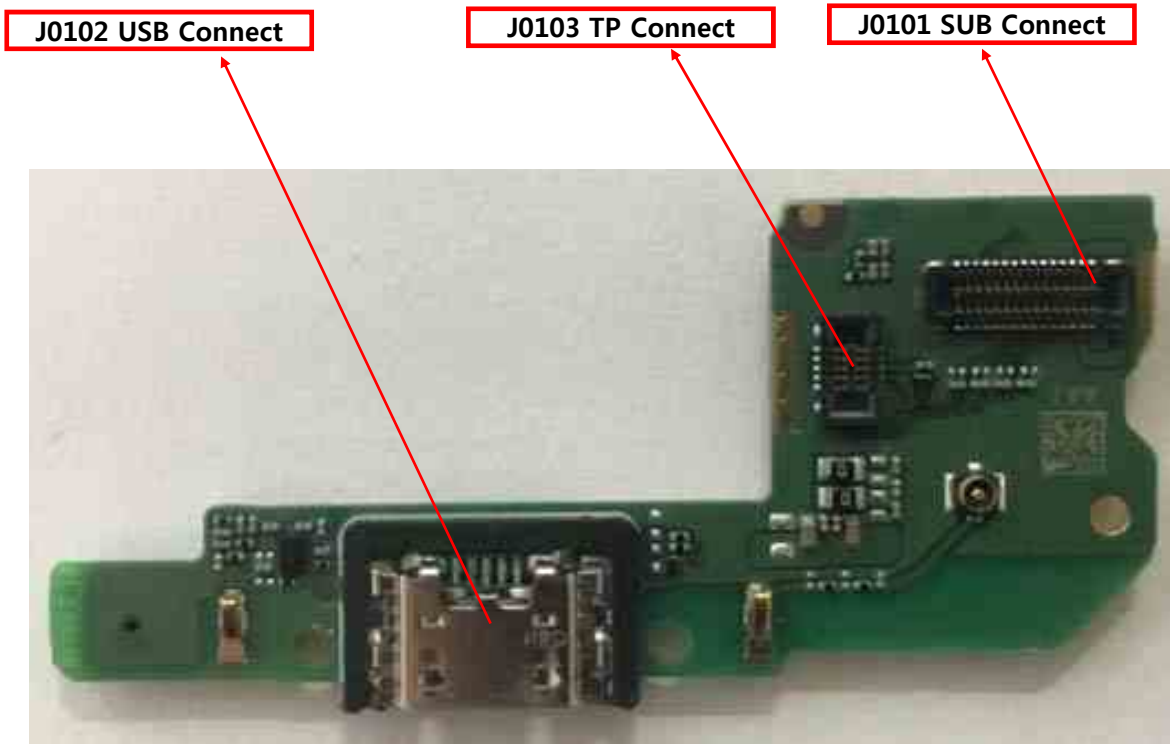



Copyright © 2019 LG Electronics. Inc. All right reserved.
Only training and service purposes

ART FILM - Adt

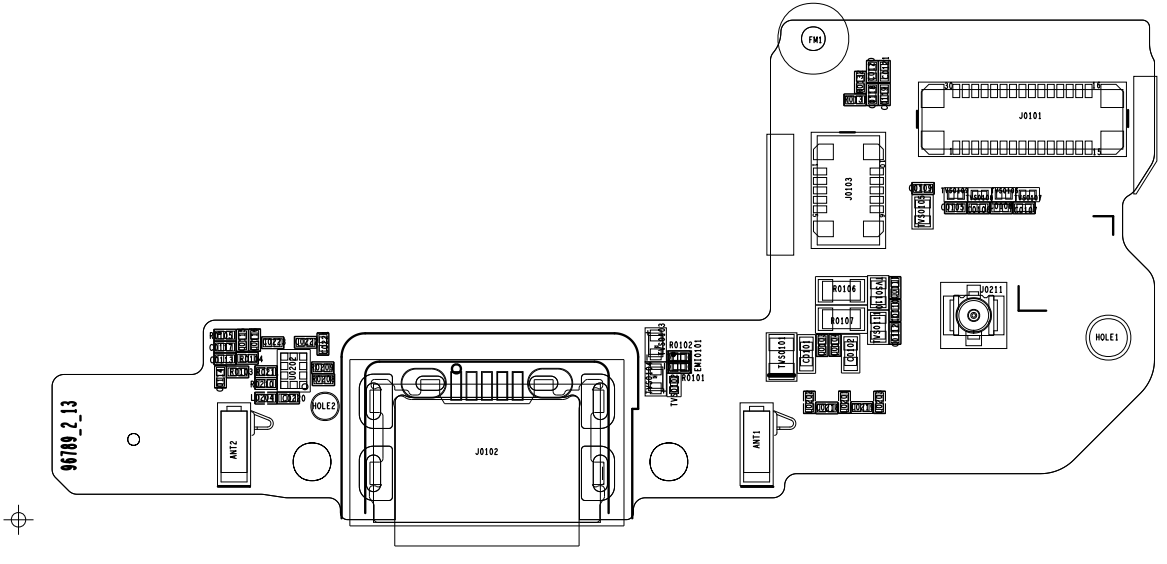


# 118

ART FILM - Adt

LG-model name-SUB Board_BOT

Copyright © 2019 LG Electronics. Inc. All right reserved.
Only training and service purposes

ART FILM - Adb

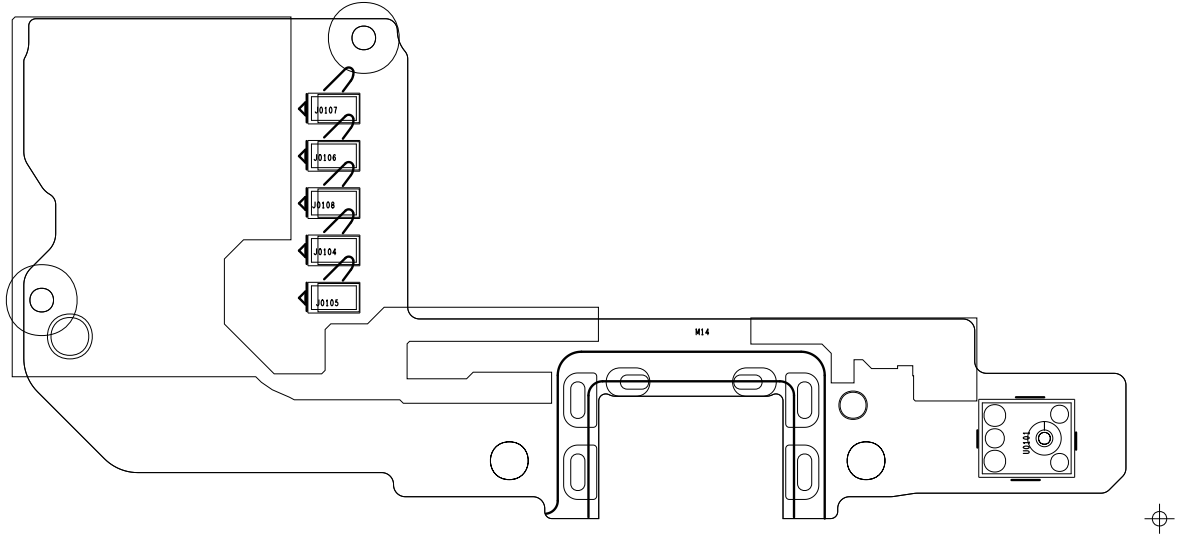


# 120

ART FILM - Adb

<table>
<tr><th></th><th colspan="2">Prime</th></tr>
<tr><td>PCB Revision</td><td>
<table>
<tr><th colspan="10">项目配置识别</th></tr>
<tr><td>SKU_ID0</td><td>GPIO51</td><td>0</td><td>0</td><td>0</td><td>0</td><td>0</td><td>0</td><td>0</td><td>0</td><td>1</td></tr>
<tr><td>SKU_ID1</td><td>GPIO50</td><td>0</td><td>0</td><td>0</td><td>0</td><td>1</td><td>1</td><td>1</td><td>1</td><td>0</td></tr>
<tr><td>SKU_ID2</td><td>GPIO54</td><td>0</td><td>0</td><td>1</td><td>1</td><td>0</td><td>0</td><td>1</td><td>1</td><td>0</td></tr>
<tr><td>SKU_ID3</td><td>GPIO53</td><td>0</td><td>1</td><td>0</td><td>1</td><td>0</td><td>1</td><td>0</td><td>1</td><td>0</td></tr>
<tr><td>SKU_Version</td><td></td><td>S96789AA1</td><td>S96789BA1</td><td>S96789CA1</td><td>S96789DA1</td><td>S96789EA1</td><td>S96789FA1</td><td>S96789GA1</td><td>S96789HA1</td><td>S96789JA1</td></tr>
<tr><td>LG_Version</td><td></td><td>LMX120EMW</td><td>LMX120EMW</td><td>LMX120HM</td><td>LMX120BMW</td><td>LMX120ZM</td><td>LMX120ZMW</td><td>LMX120JM</td><td>LMX120YMW</td><td>LMX120WM</td></tr>
</table>
<table>
<tr><th colspan="10">PCB_VER识别</th></tr>
<tr><td>PCB_ID0</td><td>GPIO52</td><td>0</td><td>0</td><td>0</td><td>0</td><td>1</td><td>1</td><td>1</td><td></td><td></td></tr>
<tr><td>PCB_ID1</td><td>GPIO0</td><td>0</td><td>0</td><td>1</td><td>1</td><td>0</td><td>0</td><td>0</td><td></td><td></td></tr>
<tr><td>PCB_ID2</td><td>GPIO1</td><td>0</td><td>1</td><td>0</td><td>1</td><td>0</td><td>0</td><td>0</td><td></td><td></td></tr>
<tr><td>LG_Version</td><td></td><td>0 (PP0)</td><td>0.5(PP0.5)</td><td>A(PP1)</td><td>B(PP2)</td><td>1.0(DV1)</td><td>1.0(DV2)</td><td>1.0(PV)</td><td></td><td></td></tr>
<tr><td>WT_Version</td><td></td><td>96789_1_10</td><td>96789_1_11</td><td>96789_1_12</td><td>96789_1_13</td><td>96789_1_13M14</td><td>96789_1_13M15</td><td>96789_1_13M16</td><td></td><td></td></tr>
</table>
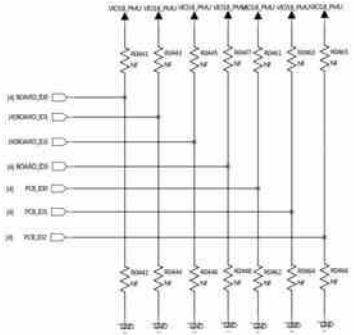
</td></tr>
<tr><td>Memory</td><td>P/N: 16EMCP08_NL3DTB28<br>RAM Size: 1GB<br>ROM Size: 16GB</td></tr>
<tr><td>Applied Models</td><td>LMX120EMW; LMX120HM; LMX120BMW;<br>LMX120ZM; LMX120ZMW; LMX120JM;<br>LMX120YMW; LMX120WM</td></tr>
</table>



Copyright © 2019 LG Electronics. Inc. All right reserved.
Only training and service purposes

## 1. Hidden Menu Start

- Enable “developer options”
- Install Hidden menu apk and HWTest apk
- Run HWTest app

## 2. HW TEST

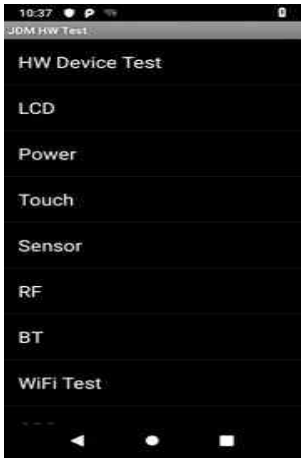


## 2. HW Device Test

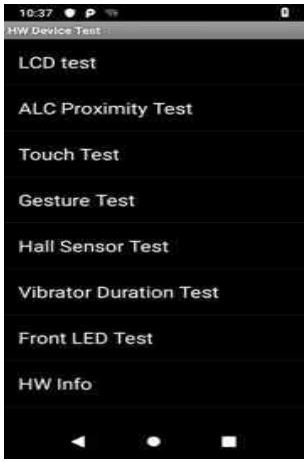


## 3. MODEM TEST

Copyright © 2019 LG Electronics. Inc. All right reserved.
Only training and service purposes

| 1. LCD | 2. Power | 3. Touch | 4. Sensor |
|---|---|---|---|
| 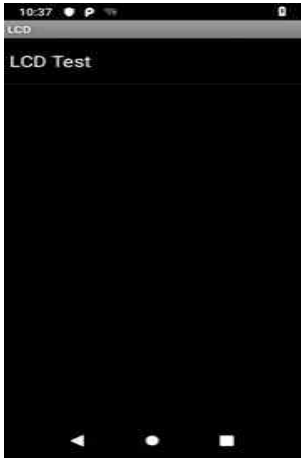 | 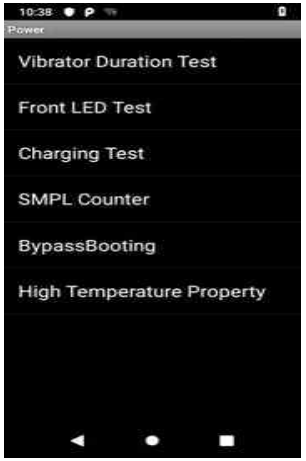 | 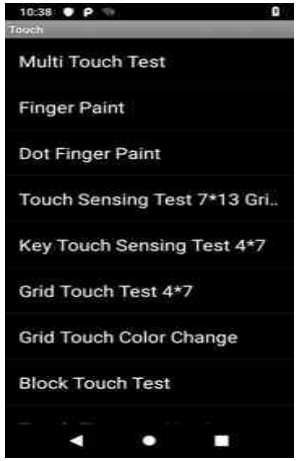 | 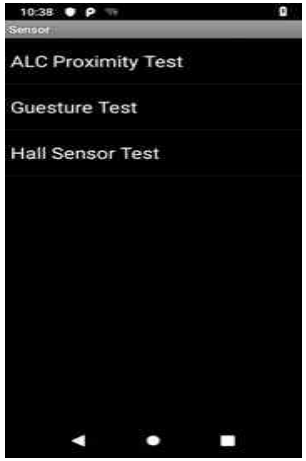 |
| 5. RF | 6. BT | 7. GPS | |
| 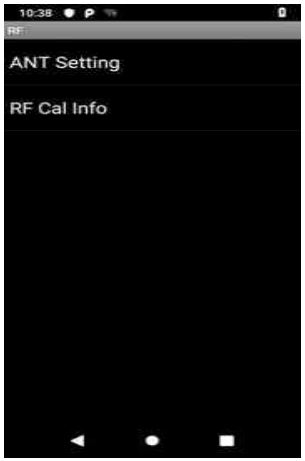 | 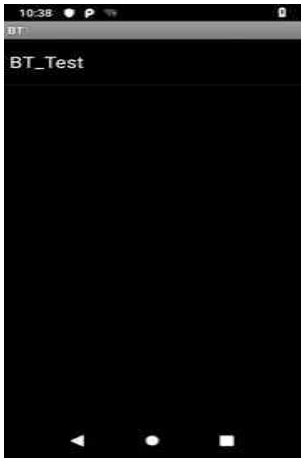 | 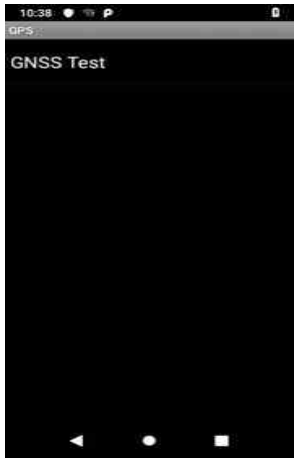 | |



Copyright © 2019 LG Electronics. Inc. All right reserved.
Only training and service purposes

## 1. Summary

| Tool Ver. | DLL name | USB Driver | |
|---|---|---|---|
| 2.0.2.6 | COMMON_20181023_ LGFLASHv216.dll | LGMobileDriver_WHQL_Ver_4 | |
| Please Check the Version to "LGST ServiceCenter Tool" | | | |
| H/W | | | |
| | Name | Part No. | SW |
| D/L Cable | Micro 5P (56-open-910K) USB DLC | RAD32167835 | TOT |

## 2. . USB COM port Setting

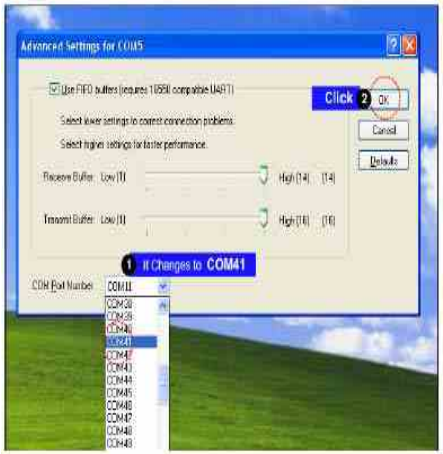

## 3. USB D/L Cable setting

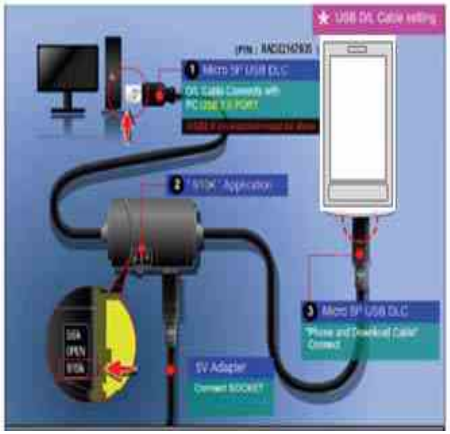


## 4. Flash tool D/L setting

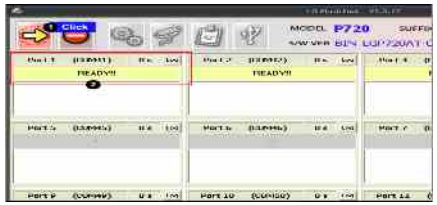

※ If you want more information, please refer LGST ServiceCenter Tool's Notification"Download User Guide".



Copyright © 2019 LG Electronics. Inc. All right reserved.
Only training and service purposes

## 1. Summary

| D/L configuration | Require | Remarks |
|---|---|---|
| Computer | Windows | With more than two USB ports, Equipped with GPIB card |
| Jig | With rf test heed | |
| Wire | USB cable，GPIB cable，RF cable | RF line loss is less than 1DB |
| Power Supply | Programmable power supply | Voltage output requires accuracy of 0.3V |
| All Instrument | CMW500 | |
| Mobile Software | According to production order | |
| Tool Software | According to the latest release of DCC tool version list | |
| Operating System | Win2000、WinXP(SP2以上) | It is recommended to install anti-virus software |

## 2. . USB COM port Setting

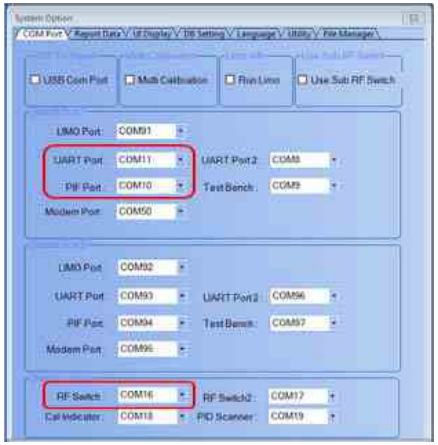


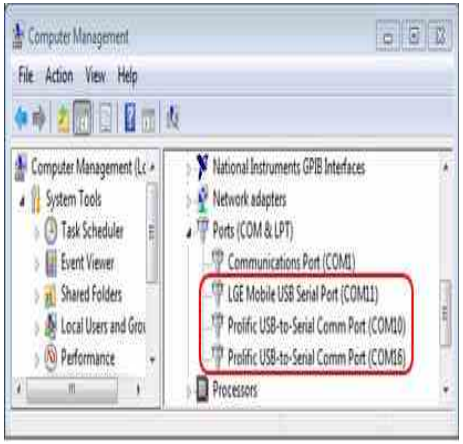


## 3. Calibration Cable setting

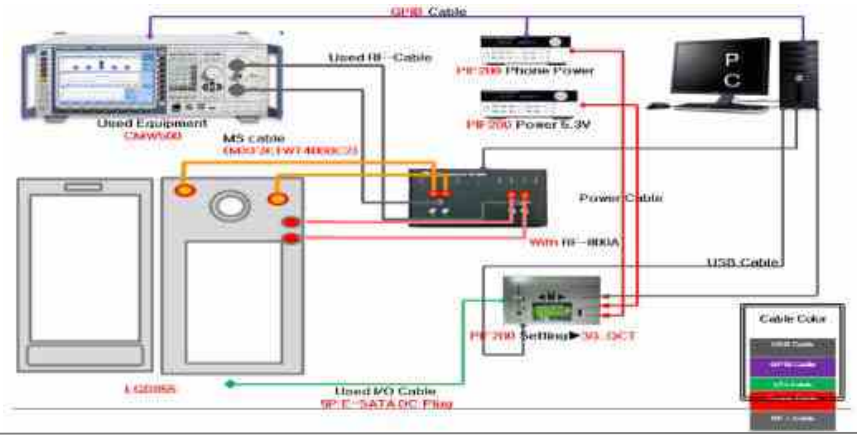


## 4. Tachyon setting

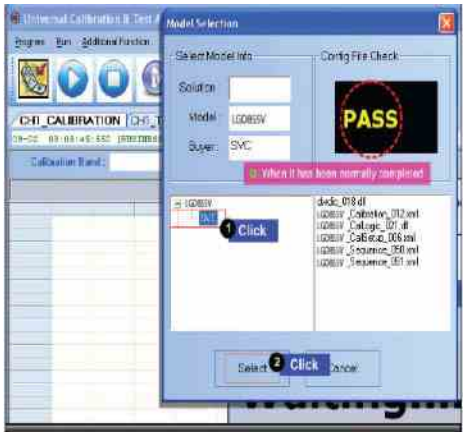

※ If you want more information, please refer LGST ServiceCenter Tool's Notification "RF Calibration User Guide".


Copyright © 2019 LG Electronics. Inc. All right reserved.
Only training and service purposes

## 12.1 Phone Disassemble Guide

| 1. Disassemble SIM Tray | 2. Disassemble Rear cover | 3. Disassemble Screw (15ea) | 4. Disassemble Inner Cover |
|---|---|---|---|
| | Disassemble cloc kwise from the t op | | |
| **5. Disassemble Connector (4ea)** | **6. Disassemble main PCBA and Sub PCBA** | **6. Disassemble HW Parts (9ea)** | **7. Complete Disassembling** |
| | | 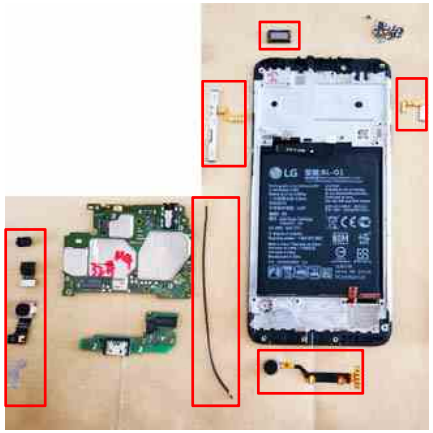 | |



Copyright © 2019 LG Electronics. Inc. All right reserved.
Only training and service purposes

12.2 Battery Disassemble Guide

| 1. . Leave Bar Assy in **Temperature box (70º**, 8min) | 2. Disassemble NOTES | **2. Disassemble Battery** | 4. |
|---|---|---|---|
| | **1.Must use plastic tools.**<br>**2. Do not pierce the battery. Damage to the battery skin can cause the battery to smoke or even burn**<br>**3. When disassembling the battery, the plastic bar is left to avoid damage to LCM_FPC** | | |
| 5. | 6. | 7. | 8. |
| | | | |



Copyright ⓒ 2019 LG Electronics. Inc. All right reserved.
Only training and service purposes

### 12.3 Battery Cover Disassemble Guide

① Use the disassemble card to disassemble the hook at the corner above the tray hole
② Use the disassemble card to disassemble the hook at the corner of the rear lens
③ The battery cover can be disassemble from the bottom


Copyright ⓒ 2019 LG Electronics. Inc. All right reserved.
Only training and service purposes

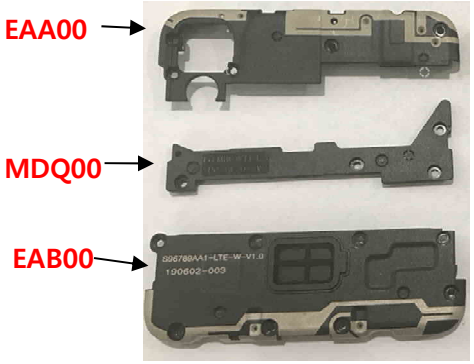


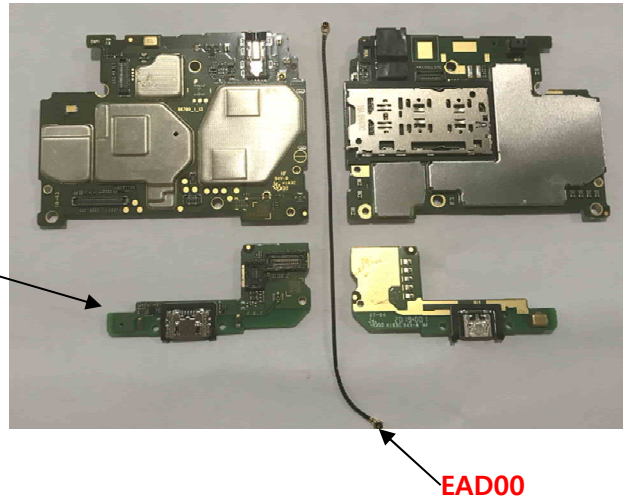

Copyright © 2019 LG Electronics. Inc. All right reserved.
Only training and service purposes

| No | Part No | Description | Qty | Location No. |
|---|---|---|---|---|
| 1 | AGF80302419 | Package Assembly | 1 | AGF000000 |
| 2 | MFZ66435029 | Packing,Blister | 1 | MFZ005500 |
| 3 | MAY68388950 | Box,Unit | 1 | MAY084000 |
| 4 | MAY68388904 | Box,Unit | 1 | MAY084001 |
| 5 | MHK66230304 | Sheet | 1 | MHK000000 |
| 6 | MEZ65773066 | Label,Unit Box | 1 | MEZ084100 |
| 7 | AGJ74798505 | Pallet Assembly | 1 | AGJ000000 |
| 8 | MAY68389604 | Box,Pallet Sleeve | 0.00167 | MAY115200 |
| 9 | MGA64099402 | Pallet | 0.00167 | MGA000001 |
| 10 | MLAJ0004402 | Label,Master Box | 0.00667 | MEZ047200 |
| 11 | MAY68349901 | Box,Master | 0.1 | MAY047100 |
| 12 | MLAJ0004402 | Label,Master Box | 0.1 | MEZ047200 |
| 13 | AAD89731802 | Addition Assembly | 1 | AAD000000 |
| 14 | EAY65068902 | Adapters | 1 | EAY060000 |
| 15 | EAB64468444 | Earphone,Stereo | 1 | EAB010200 |
| 16 | EAD62377927 | Cable,Assembly | 1 | EAD010000 |
| 17 | MJN71593401 | Tape,Protect | 1 | MJN061100 |
| 18 | AFN79155001 | Manual Assembly,Operation | 1 | AFN053800 |
| 19 | MBM67279101 | Card,Quick Reference | 1 | MBM062600 |
| 20 | MAF65348001 | Bag,Vinyl | 1 | MAF086500 |
| 21 | AAA78367801 | Accessory Assembly | 1 | AAA000000 |
| 22 | MAF66170501 | Bag,Vinyl | 1 | MAF086500 |
| 23 | MGJ66983901 | Plate | 1 | MGJ000000 |
| 24 | MBM67279601 | Card | 1 | MBM000000 |
| 25 | MBM66205501 | Card,Warranty | 1 | MBM087200 |
| 26 | MFL71466201 | Manual,Operation | 0 | MFL053800 |
| 27 | AGQ91073407 | Phone Assembly | 1 | AGQ000000 |
| 28 | ACQ91493907 | Cover Assembly,EMS | 1 | ACQ100400 |
| 29 | ACQ91567802 | Cover Assembly,Bar | 1 | ACQ003400 |
| 30 | ACQ91555801 | Cover Assembly,Middle | 1 | ACQ049200 |
| 31 | ACQ91575301 | Cover Assembly,Middle(Sub) | 1 | ACQ131900 |
| 32 | MCK71165501 | Cover,Middle | 1 | MCK049200 |
| 33 | MCK71165601 | Cover,Middle | 1 | MCK049201 |
| 34 | MET63537501 | Insert,Nut | 4 | MET099500 |
| 35 | MHK67386501 | Sheet | 1 | MHK000000 |
| 36 | MJN71647801 | Tape,Protect | 1 | MJN061100 |
| 37 | EBR89449801 | PCB Assembly,Flexible | 1 | EBR070500 |
| 38 | MJN71573701 | Tape,Window | 1 | MJN089300 |
| 39 | MDJ66105001 | Filter | 1 | MDJ000000 |
| 40 | EBR89485101 | PCB Assembly,Flexible | 1 | EBR070501 |



Copyright ⓒ 2019 LG Electronics. Inc. All right reserved.
Only training and service purposes

| No | Part No | Description | Qty | Location No. |
|---|---|---|---|---|
| 41 | MCQ70585501 | Damper | 1 | MCQ000000 |
| 42 | MCQ70509901 | Damper | 1 | MCQ000001 |
| 43 | MHK67406101 | Sheet | 1 | MHK000001 |
| 44 | MJN71591201 | Tape | 1 | MJN000009 |
| 45 | MJN71573801 | Tape,Camera | 1 | MJN009400 |
| 46 | MDS67350601 | Gasket | 2 | MDS000000 |
| 47 | MDS67370401 | Gasket | 4 | MDS000001 |
| 48 | MJN71647901 | Tape | 1 | MJN000003 |
| 49 | MJN71591001 | Tape | 1 | MJN000004 |
| 50 | MJN71667701 | Tape | 1 | MJN000008 |
| 51 | MJN71591101 | Tape | 1 | MJN000007 |
| 52 | MJN71667601 | Tape | 1 | MJN000005 |
| 53 | MJN71668001 | Tape | 1 | MJN000011 |
| 54 | MJN71667901 | Tape | 1 | MJN000010 |
| 55 | MJN71648001 | Tape | 1 | MJN000006 |
| 56 | MEZ68508301 | Label | 2 | MEZ000000 |
| 57 | MJN71573901 | Tape | 1 | MJN000000 |
| 58 | MJN71591301 | Tape | 1 | MJN000001 |
| 59 | MJN71650401 | Tape | 1 | MJN000002 |
| 60 | EAB65609701 | Receiver | 1 | EAB010400 |
| 61 | EAT64953701 | Hybrid Touch LCD Module,OLED | 1 | EAT130000 |
| 62 | EAU64904101 | Motor,DC | 1 | EAU010000 |
| 63 | EAC64559001 | Rechargeable Battery,Lithium Polymer | 1 | EAC020200 |
| 64 | EBR89518401 | PCB Assembly,Sub | 1 | EBR072900 |
| 65 | EBR89474801 | PCB Assembly,Sub,Insert | 1 | EBR072500 |
| 66 | MCQ70585601 | Damper | 1 | MCQ000000 |
| 67 | MCQ70512201 | Damper | 1 | MCQ000001 |
| 68 | EBR89518501 | PCB Assembly,Sub,SMT | 1 | EBR072800 |
| 69 | EBR89493301 | PCB Assembly,Sub,SMT Bottom | 1 | EBR072600 |
| 70 | EAB65609601 | Microphone,Condenser | 1 | U0101 |
| 71 | MBV64461601 | Clip | 5 | J0104,J0105,J0106,J0107,J0108 |
| 72 | EBR89474701 | PCB Assembly,Sub,SMT Top | 1 | EBR072700 |
| 73 | EAE65190301 | Capacitor,Ceramic,Chip | 1 | C0102 |
| 74 | EAE65190701 | Capacitor,Ceramic,Chip | 1 | C0114 |
| 75 | EAE65232701 | Capacitor,Ceramic,Chip | 2 | C0109,C0120 |
| 76 | EAE65264701 | Capacitor,Ceramic,Chip | 1 | C0104 |
| 77 | EAE65264801 | Capacitor,Ceramic,Chip | 1 | C0103 |
| 78 | EAE65265201 | Capacitor,Ceramic,Chip | 1 | C0101 |
| 79 | EAE65969301 | Capacitor,Ceramic,Chip | 5 | C0110,C0115,C0221,C0222,C0223 |
| 80 | EAE66008901 | Capacitor,Ceramic,Chip | 1 | L0203 |



Copyright © 2019 LG Electronics. Inc. All right reserved.
Only training and service purposes

| No | Part No | Description | Qty | Location No. |
|---|---|---|---|---|
| 81 | EAE66045501 | Capacitor,Ceramic,Chip | 12 | C0105,C0106,C0107,C0108,C0111,C0112,C0113,C0116,C0117,C0118,C0119,C0121 |
| 82 | EAG65731501 | Connector,BtoB | 1 | J0101 |
| 83 | EAG66476901 | Connector,I/O | 1 | J0102 |
| 84 | EAG66495501 | Connector,RF | 1 | J0211 |
| 85 | EAG66551701 | Connector,BtoB | 1 | J0103 |
| 86 | EAH64213301 | Diode,TVS | 1 | TVS0105 |
| 87 | EAH64873401 | Diode,TVS | 1 | TVS0102 |
| 88 | EAM64811801 | Filter,Separator,Switch | 1 | U0202 |
| 89 | EAP64971801 | Inductor,Multilayer,Chip | 1 | C0219 |
| 90 | EAP65011001 | Inductor,Multilayer,Chip | 1 | R0210 |
| 91 | EAP65068201 | Inductor,Multilayer,Chip | 3 | L0201,L0204,R0209 |
| 92 | EAX69075601 | PCB,Sub | 1 | PCB |
| 93 | EBC64798001 | Resistor,Chip | 10 | C0218,C0220,R0101,R0102,R0103,R0104,R0105,R0131,R0132,R0208 |
| 94 | EBC64816301 | Resistor,Chip | 2 | R0106,R0107 |
| 95 | MBV64461602 | Clip | 2 | ANT1,ANT2 |
| 96 | EAD65666801 | Cable,FFC | 1 | EAD030000 |
| 97 | EAA65825401 | Antenna Assembly | 1 | EAA040000 |
| 98 | EAB65549301 | Speaker Module | 1 | EAB010100 |
| 99 | MDQ66458201 | Frame | 1 | MDQ000000 |
| 100 | ACQ91555904 | Cover Assembly,Rear | 1 | ACQ063300 |
| 101 | MCK71165704 | Cover,Rear | 1 | MCK063300 |
| 102 | MDJ66184201 | Filter | 1 | MDJ000000 |
| 103 | MHK67368601 | Sheet | 1 | MHK000000 |
| 104 | MBG67703101 | Button | 1 | MBG000000 |
| 105 | MCR68149201 | Decor | 1 | MCR000000 |
| 106 | MCR68206901 | Decor | 1 | MCR000001 |
| 107 | MJN71648101 | Tape | 1 | MJN000001 |
| 108 | MFB65333101 | Lens,Flash | 1 | MFB029600 |
| 109 | MCQ70585901 | Damper | 1 | MCQ000000 |
| 110 | MJN71591401 | Tape | 1 | MJN000002 |
| 111 | MCQ70585801 | Damper,Camera | 1 | MCQ009400 |
| 112 | MBG67684201 | Button,Side | 1 | MBG071300 |
| 113 | MJN71591501 | Tape | 1 | MJN000000 |
| 114 | MJN71574101 | Tape | 1 | MJN000003 |
| 115 | MKC67298901 | Window,Camera | 1 | MKC009400 |
| 116 | ABN76299401 | Cap Assembly | 1 | ABN000000 |
| 117 | EBR88916901 | PCB Assembly,Main | 1 | EBR071900 |
| 118 | EBR89520701 | PCB Assembly,Main,Auto | 1 | EBR071400 |
| 119 | EBR88966301 | PCB Assembly,Main,SMT | 1 | EBR071800 |
| 120 | EBR89476301 | PCB Assembly,Main,SMT Top | 1 | EBR071700 |



Copyright © 2019 LG Electronics. Inc. All right reserved.
Only training and service purposes

| No | Part No | Description | Qty | Location No. |
|---|---|---|---|---|
| 121 | EAE62726601 | Capacitor,Ceramic,Chip | 2 | C1012,C1102 |
| 122 | EAE65190701 | Capacitor,Ceramic,Chip | 29 | C0304,C0505,C0510,C0514,C0516,C0517,C0519,C0520,C0525,C0526,C0601,C0602,C0608,C0610,C0611,C0614,C0615,C0622,C0623,C0627,C0753,C0801,C0804,C0806,C0812,C0914,C1014,C1469,C1471 |
| 123 | EAE65232701 | Capacitor,Ceramic,Chip | 34 | C0518,C0524,C0626,C0701,C0726,C0731,C0732,C0733,C0734,C0736,C0738,C0754,C0802,C0803,C0807,C0813,C0814,C0815,C0930,C0933,C0937,C0938,C0944,C0945,C1007,C1010,C1103,C1250,C1418,C1420,C1422,C1468,C1470,C1482 |
| 124 | EAE65251401 | Capacitor,Ceramic,Chip | 3 | C0703,C0706,C0711 |
| 125 | EAE65252301 | Capacitor,Ceramic,Chip | 1 | C0607 |
| 126 | EAE65252701 | Capacitor,Ceramic,Chip | 2 | C0523,C0625 |
| 127 | EAE65252801 | Capacitor,Ceramic,Chip | 3 | C0831,C1478,C1901 |
| 128 | EAE65262801 | Capacitor,Ceramic,Chip | 14 | C0606,C0621,C0704,C0712,C0723,C0744,C0759,C0761,C0816,C0818,C1130,C1220,C1457,C1484 |
| 129 | EAE65263201 | Capacitor,Ceramic,Chip | 7 | C0624,C0717,C0725,C0756,C0805,C0817,C1101 |
| 130 | EAE65969301 | Capacitor,Ceramic,Chip | 8 | C0925,C0934,C0941,C1419,C1421,C1423,C1475,C1488 |
| 131 | EAE65969801 | Capacitor,Ceramic,Chip | 1 | C1413 |
| 132 | EAE65970001 | Capacitor,Ceramic,Chip | 1 | R1401 |
| 133 | EAE65970201 | Capacitor,Ceramic,Chip | 1 | C1412 |
| 134 | EAE66008801 | Capacitor,Ceramic,Chip | 8 | C0922,C0931,C0932,C0935,C0936,C0942,C0943,C1467 |
| 135 | EAE66008901 | Capacitor,Ceramic,Chip | 1 | C1416 |
| 136 | EAE66027001 | Capacitor,Ceramic,Chip | 2 | C1494,C1495 |
| 137 | EAE66046001 | Capacitor,Ceramic,Chip | 1 | C1448 |
| 138 | EAE66046101 | Capacitor,Ceramic,Chip | 2 | C1425,C1428 |
| 139 | EAG65811701 | Socket,Card | 1 | J1203 |
| 140 | EAG65854701 | Socket,Card | 1 | J1204 |
| 141 | EAG66531701 | Socket,Card | 1 | J1201 |
| 142 | EAG66532101 | Socket,Card | 1 | SH6417 |
| 143 | EAG66551901 | Connector,BtoB | 1 | CON1102 |
| 144 | EAH64213301 | Diode,TVS | 2 | TVS1201,TVS1219 |
| 145 | EAH64233701 | Diode,Schottky | 1 | Q1200 |
| 146 | EAH64252601 | Diode,Schottky | 1 | Q1201 |
| 147 | EAH64855001 | Diode,TVS | 1 | TVS0910 |
| 148 | EAH64855101 | Diode,TVS | 4 | TVS1214,TVS1215,TVS1216,TVS1217 |
| 149 | EAH64892901 | Diode,TVS | 4 | TVS0909,TVS0928,TVS0931,TVS0932 |
| 150 | EAM64812401 | Filter,Bead | 1 | BEAD0905 |
| 151 | EAM65572001 | Filter,Bead | 2 | BEAD0902,BEAD0904 |
| 152 | EAM65572201 | Filter,Separator,Switch | 1 | U1402 |
| 153 | EAN65983701 | IC,Ambient Light Sensor | 1 | U1001 |
| 154 | EAN65983901 | IC,Digital Baseband Processor,4G | 1 | U0301 |
| 155 | EAN66000401 | IC,Acceleration Sensor | 1 | U1004 |
| 156 | EAN66051201 | IC,MCP,eMMC | 1 | U0601 |
| 157 | EAN66069601 | IC,PMIC | 1 | U0701 |
| 158 | EAP64508001 | Inductor,Wire Wound,Chip | 1 | L0704 |
| 159 | EAP64546701 | Inductor,Multilayer,Chip | 2 | L1402,R1405 |
| 160 | EAP64566602 | Inductor,Multilayer,Chip | 1 | C1481 |



Copyright © 2019 LG Electronics. Inc. All right reserved.
Only training and service purposes

| No | Part No | Description | Qty | Location No. |
|---|---|---|---|---|
| 161 | EAP64906001 | Inductor,Multilayer,Chip | 1 | L1488 |
| 162 | EAP64972101 | Inductor,Multilayer,Chip | 2 | L1401,L1419 |
| 163 | EAP64972401 | Inductor,Multilayer,Chip | 1 | L1411 |
| 164 | EAP64972701 | Inductor,Multilayer,Chip | 1 | L1418 |
| 165 | EAP65011001 | Inductor,Multilayer,Chip | 1 | L1489 |
| 166 | EAP65011201 | Inductor,Multilayer,Chip | 1 | C1414 |
| 167 | EAP65048001 | Inductor,Multilayer,Chip | 1 | R1126 |
| 168 | EAP65068301 | Inductor,Multilayer,Chip | 1 | C1407 |
| 169 | EAP65068401 | Inductor,Multilayer,Chip | 2 | L1480,L1482 |
| 170 | EAW64103601 | Oscillator,Crystal | 1 | X0801 |
| 171 | EAX69095501 | PCB,Main | 1 | PCB |
| 172 | EBC64739201 | Resistor,Chip | 2 | NTC0301,NTC1401 |
| 173 | EBC64776901 | Resistor,Chip | 2 | R0412,R0944 |
| 174 | EBC64777201 | Resistor,Chip | 8 | R0431,R0432,R0916,R1204,R1205,R1207,R1210,R1232 |
| 175 | EBC64777301 | Resistor,Chip | 9 | R0442,R0444,R0445,R0448,R0461,R0464,R0466,R1007,R1009 |
| 176 | EBC64777401 | Resistor,Chip | 3 | C1219,R1222,R1231 |
| 177 | EBC64777601 | Resistor,Chip | 6 | R0411,R1244,R1245,R1246,R1247,R1248 |
| 178 | EBC64796901 | Resistor,Chip | 4 | R0900,R1146,R1243,R1416 |
| 179 | EBC64797401 | Resistor,Chip | 2 | R1256,R1259 |
| 180 | EBC64797501 | Resistor,Chip | 1 | R1257 |
| 181 | EBC64798001 | Resistor,Chip | 25 | L1405,L1410,L1425,L1426,L1451,R0301,R0320,R0325,R0326,R0801,R0812,R0814,R0816,R0908,R0918,R0928,R0930,R0937,R0939,R1131,R1134,R1135,R1136,R1137,R1415 |
| 182 | EBC64816401 | Resistor,Chip | 1 | R1403 |
| 183 | EBC64816701 | Resistor,Chip | 1 | R0835 |
| 184 | EBC64817101 | Resistor,Chip | 2 | R0604,R0605 |
| 185 | EBC64838101 | Resistor,Chip | 1 | R0822 |
| 186 | EBC64838401 | Resistor,Chip | 2 | R0311,R0804 |
| 187 | EBC64838601 | Resistor,Chip | 1 | R0701 |
| 188 | EBC64838801 | Resistor,Chip | 1 | R0823 |
| 189 | EBC65442001 | Resistor,Chip | 2 | R0601,R0602 |
| 190 | EBC65442201 | Resistor,Chip | 2 | R0940,R0941 |
| 191 | EBC65442301 | Resistor,Chip | 2 | R0315,R1413 |
| 192 | EBC65457901 | Resistor,Chip | 1 | R0915 |
| 193 | EBC65477401 | Resistor,Chip | 1 | R0402 |
| 194 | EBC65477501 | Resistor,Chip | 1 | R0824 |
| 195 | EBC65477701 | Resistor,Chip | 1 | R0340 |
| 196 | EBC65477801 | Resistor,Chip | 1 | R1254 |
| 197 | EBC65477901 | Resistor,Chip | 1 | R0302 |
| 198 | EBC65478101 | Resistor,Chip | 1 | R0802 |
| 199 | EBC65478201 | Resistor,Chip | 1 | R1012 |
| 200 | MBK66212601 | Can,Shield | 1 | SH6410 |



Copyright © 2019 LG Electronics. Inc. All right reserved.
Only training and service purposes

| No | Part No | Description | Qty | Location No. |
|---|---|---|---|---|
| 201 | MBK66232501 | Can,Shield | 1 | SH6413 |
| 202 | MBL67836901 | Cap,Earphone Jack | 1 | CON0901 |
| 203 | MBV64461601 | Clip | 10 | ANT1901,ANT1902,ANT1903,ANT1904,J1206,J1207,J1208,J1209,J1210,J1211 |
| 204 | EBR89505201 | PCB Assembly,Main,SMT Bottom | 1 | EBR071600 |
| 205 | EAB65609601 | Microphone,Condenser | 1 | MIC0901 |
| 206 | EAE65190701 | Capacitor,Ceramic,Chip | 22 | C0398,C0413,C0414,C0419,C0428,C0429,C0440,C0441,C0442,C0443,C0444,C0504,C0507,C0769,C0929,C1301,C1302,C1303,C1304,C1305,C1306,C1702 |
| 207 | EAE65190801 | Capacitor,Ceramic,Chip | 1 | C0752 |
| 208 | EAE65196101 | Capacitor,Ceramic,Chip | 1 | C1149 |
| 209 | EAE65232701 | Capacitor,Ceramic,Chip | 22 | C0302,C0303,C0409,C0410,C0411,C0412,C0418,C0420,C0422,C0433,C0437,C0716,C0730,C0768,C0770,C1131,C1157,C1241,C1621,C1710,C1712,C1714 |
| 210 | EAE65232901 | Capacitor,Ceramic,Chip | 1 | C0501 |
| 211 | EAE65244802 | Capacitor,Ceramic,Chip | 2 | C0750,C0904 |
| 212 | EAE65250701 | Capacitor,Ceramic,Chip | 2 | C0722,C0724 |
| 213 | EAE65250801 | Capacitor,Ceramic,Chip | 1 | C1148 |
| 214 | EAE65251401 | Capacitor,Ceramic,Chip | 5 | C0749,C0917,C1140,C1141,C1543 |
| 215 | EAE65252601 | Capacitor,Ceramic,Chip | 1 | C1707 |
| 216 | EAE65252701 | Capacitor,Ceramic,Chip | 2 | C0522,C1147 |
| 217 | EAE65252801 | Capacitor,Ceramic,Chip | 3 | C0926,C0999,C1542 |
| 218 | EAE65253401 | Capacitor,Ceramic,Chip | 1 | C0953 |
| 219 | EAE65262801 | Capacitor,Ceramic,Chip | 7 | C0739,C0743,C0928,C0951,C1307,C1308,C1704 |
| 220 | EAE65263201 | Capacitor,Ceramic,Chip | 6 | C0439,C0745,C0757,C0901,C0927,C1132 |
| 221 | EAE65264801 | Capacitor,Ceramic,Chip | 1 | C1230 |
| 222 | EAE65265201 | Capacitor,Ceramic,Chip | 2 | C0742,C1232 |
| 223 | EAE65323701 | Capacitor,Ceramic,Chip | 1 | C0747 |
| 224 | EAE65361501 | Capacitor,Ceramic,Chip | 1 | C0906 |
| 225 | EAE65969701 | Capacitor,Ceramic,Chip | 2 | C0905,C0907 |
| 226 | EAE65969901 | Capacitor,Ceramic,Chip | 1 | C1215 |
| 227 | EAE65970001 | Capacitor,Ceramic,Chip | 3 | C1521,C1541,C1612 |
| 228 | EAE65970101 | Capacitor,Ceramic,Chip | 1 | L1604 |
| 229 | EAE66008901 | Capacitor,Ceramic,Chip | 5 | L1511,L1525,L1561,L1612,L1633 |
| 230 | EAE66009601 | Capacitor,Ceramic,Chip | 2 | C1533,C1706 |
| 231 | EAE66009701 | Capacitor,Ceramic,Chip | 1 | C1231 |
| 232 | EAE66027101 | Capacitor,Ceramic,Chip | 13 | C1502,C1516,C1518,C1523,C1525,C1530,C1538,C1603,C1607,C1609,C1611,C1614,C1616 |
| 233 | EAE66027201 | Capacitor,Ceramic,Chip | 1 | C1514 |
| 234 | EAE66027301 | Capacitor,Ceramic,Chip | 2 | C1716,C1717 |
| 235 | EAE66046001 | Capacitor,Ceramic,Chip | 1 | L1559 |
| 236 | EAE66046201 | Capacitor,Ceramic,Chip | 1 | C1546 |
| 237 | EAE66046301 | Capacitor,Ceramic,Chip | 2 | C1512,C1601 |
| 238 | EAE66046401 | Capacitor,Ceramic,Chip | 1 | C1476 |
| 239 | EAE66046501 | Capacitor,Ceramic,Chip | 1 | L1630 |
| 240 | EAF63730601 | Varistor | 1 | U1203 |



Copyright © 2019 LG Electronics. Inc. All right reserved.
Only training and service purposes

| No | Part No | Description | Qty | Location No. |
|---|---|---|---|---|
| 241 | EAG65731501 | Connector,BtoB | 1 | CON1101 |
| 242 | EAG66495501 | Connector,RF | 1 | CON1502 |
| 243 | EAG66495601 | Connector,BtoB | 1 | J0902 |
| 244 | EAG66531601 | Connector,BtoB | 1 | CON1202 |
| 245 | EAH64153601 | Diode,TVS | 1 | TVS0919 |
| 246 | EAH64834901 | Diode,TVS | 1 | TVS1210 |
| 247 | EAH64854901 | Diode,Schottky | 1 | D1101 |
| 248 | EAH64855001 | Diode,TVS | 5 | TVS0701,TVS0903,TVS0911,TVS0912,TVS1501 |
| 249 | EAH64893001 | Diode,TVS | 2 | TVS1207,TVS1208 |
| 250 | EAM63890202 | Filter,Duplexer | 1 | U1514 |
| 251 | EAM64811801 | Filter,Separator,Switch | 1 | U1607 |
| 252 | EAM64812401 | Filter,Bead | 3 | BEAD0901,BEAD0903,BEAD0907 |
| 253 | EAM64870601 | Filter,Duplexer | 1 | U1521 |
| 254 | EAM64870701 | Filter,Separator,Switch | 2 | CON1501,CON1610 |
| 255 | EAM64870801 | Filter,Separator,Switch | 1 | U1606 |
| 256 | EAM64871401 | Filter,Duplexer | 1 | U1516 |
| 257 | EAM64892001 | Filter,Saw | 1 | U1602 |
| 258 | EAM64892101 | Filter,Saw | 1 | U1603 |
| 259 | EAM64910601 | Filter,Separator,Switch | 1 | U1511 |
| 260 | EAM64910801 | Filter,Saw | 1 | U1703 |
| 261 | EAM64910901 | Filter,LCR | 3 | EMI1101,EMI1102,EMI1103 |
| 262 | EAM64911301 | Filter,Saw | 1 | U1612 |
| 263 | EAM64912001 | Filter,Saw | 1 | FL1700 |
| 264 | EAM64930901 | Filter,Bead | 1 | B1102 |
| 265 | EAM64931101 | Filter,Duplexer | 1 | U1704 |
| 266 | EAM64931501 | Filter,Duplexer | 1 | U1608 |
| 267 | EAM64951101 | Filter,Bead | 1 | B1101 |
| 268 | EAM64971301 | Filter,Bead | 1 | BEAD1701 |
| 269 | EAM64972301 | Filter,Duplexer | 1 | U1502 |
| 270 | EAM65499801 | Filter,Bead | 2 | L0903,L0904 |
| 271 | EAM65500301 | Filter,Duplexer | 1 | U1524 |
| 272 | EAM65519701 | Filter,Duplexer | 1 | U1609 |
| 273 | EAM65552301 | Filter,Separator,Switch | 1 | U0704 |
| 274 | EAM65552401 | Filter,Duplexer | 1 | U1522 |
| 275 | EAM65552501 | Filter,Duplexer | 1 | U1512 |
| 276 | EAM65552601 | Filter,Duplexer | 1 | U1605 |
| 277 | EAM65552701 | Filter,Duplexer | 1 | U1515 |
| 278 | EAM65552801 | Filter,Duplexer | 1 | U1509 |
| 279 | EAM65572101 | Filter,Separator,Switch | 1 | U1513 |
| 280 | EAM65572401 | Filter,Duplexer | 1 | U1523 |



Copyright © 2019 LG Electronics. Inc. All right reserved.
Only training and service purposes

| No | Part No | Description | Qty | Location No. |
|---|---|---|---|---|
| 281 | EAM65572501 | Filter,Duplexer | 1 | U1611 |
| 282 | EAN65227701 | IC,RF Amplifier | 1 | U1702 |
| 283 | EAN65315401 | IC,LED Driver | 1 | U1105 |
| 284 | EAN65315601 | IC,WiFi | 1 | U1701 |
| 285 | EAN65315901 | IC,Audio Amplifier | 1 | U0902 |
| 286 | EAN66000501 | IC,LED Driver | 1 | U1101 |
| 287 | EAP64467101 | Inductor,Wire Wound,Chip | 1 | L1102 |
| 288 | EAP64507501 | Inductor,Multilayer,Chip | 1 | BEAD0906 |
| 289 | EAP64508001 | Inductor,Wire Wound,Chip | 3 | L0703,L0705,L0741 |
| 290 | EAP64527001 | Inductor,Wire Wound,Chip | 1 | L1103 |
| 291 | EAP64546701 | Inductor,Multilayer,Chip | 1 | R1606 |
| 292 | EAP64566602 | Inductor,Multilayer,Chip | 3 | L1515,L1517,L1539 |
| 293 | EAP64906001 | Inductor,Multilayer,Chip | 4 | C1701,L1540,L1554,L1639 |
| 294 | EAP64971801 | Inductor,Multilayer,Chip | 3 | C1520,C1626,R1717 |
| 295 | EAP64972101 | Inductor,Multilayer,Chip | 2 | L1486,L1606 |
| 296 | EAP64972201 | Inductor,Multilayer,Chip | 2 | L1534,L1624 |
| 297 | EAP64972301 | Inductor,Multilayer,Chip | 2 | C1604,L1535 |
| 298 | EAP64972401 | Inductor,Multilayer,Chip | 3 | C1606,L1623,L1625 |
| 299 | EAP64972601 | Inductor,Multilayer,Chip | 1 | L1509 |
| 300 | EAP64972701 | Inductor,Multilayer,Chip | 2 | L1423,R1607 |
| 301 | EAP65010901 | Inductor,Multilayer,Chip | 6 | C1515,C1519,C1540,C1617,L1556,L1613 |
| 302 | EAP65011001 | Inductor,Multilayer,Chip | 2 | L1565,L1620 |
| 303 | EAP65011101 | Inductor,Multilayer,Chip | 3 | C1522,C1708,L1532 |
| 304 | EAP65011201 | Inductor,Multilayer,Chip | 1 | C1625 |
| 305 | EAP65011301 | Inductor,Multilayer,Chip | 5 | C1501,C1537,L1523,L1609,L1642 |
| 306 | EAP65011401 | Inductor,Multilayer,Chip | 1 | L0701 |
| 307 | EAP65047501 | Inductor,Multilayer,Chip | 4 | C1608,C1610,L1526,L1537 |
| 308 | EAP65047601 | Inductor,Multilayer,Chip | 4 | L1544,L1560,L1562,L1629 |
| 309 | EAP65047701 | Inductor,Multilayer,Chip | 1 | L1564 |
| 310 | EAP65047801 | Inductor,Multilayer,Chip | 1 | C1509 |
| 311 | EAP65047901 | Inductor,Multilayer,Chip | 2 | L1528,L1644 |
| 312 | EAP65048101 | Inductor,Multilayer,Chip | 1 | L0702 |
| 313 | EAP65068201 | Inductor,Multilayer,Chip | 1 | L1632 |
| 314 | EAP65068401 | Inductor,Multilayer,Chip | 4 | C1715,L1529,L1607,L1640 |
| 315 | EAP65068501 | Inductor,Multilayer,Chip | 2 | L1519,L1615 |
| 316 | EAP65068601 | Inductor,Multilayer,Chip | 1 | L1572 |
| 317 | EAP65068701 | Inductor,Multilayer,Chip | 2 | C1517,R1716 |
| 318 | EAP65068801 | Inductor,Multilayer,Chip | 1 | L1549 |
| 319 | EAV64834101 | LED,Flash | 1 | LED1101 |
| 320 | EBC64738601 | Resistor,Chip | 1 | R1330 |



Copyright © 2019 LG Electronics. Inc. All right reserved.
Only training and service purposes

| No | Part No | Description | Qty | Location No. |
|---|---|---|---|---|
| 321 | EBC64776601 | Resistor,Chip | 1 | R1115 |
| 322 | EBC64776901 | Resistor,Chip | 1 | R0945 |
| 323 | EBC64777101 | Resistor,Chip | 2 | R0907,R1225 |
| 324 | EBC64777201 | Resistor,Chip | 1 | R0925 |
| 325 | EBC64777401 | Resistor,Chip | 3 | R0742,R0745,R1112 |
| 326 | EBC64778401 | Resistor,Chip | 1 | R1220 |
| 327 | EBC64796901 | Resistor,Chip | 7 | R0920,R1121,R1123,R1124,R1138,R1317,R1318 |
| 328 | EBC64798001 | Resistor,Chip | 45 | C1510,C1511,C1531,C1532,C1618,C1632,L1520,L1707,R0328,R0455,R0825,R0826,R0927,R1113,R1127,R1238,R1255,R1316,R1505,R1506,R1508,R1509,R1511,R1512,R1513,R1518,R1526,R1527,R1528,R1530,R1531,R1532,R1535,R1544,R1603,R1604,R1605,R1609,R1704,R1708,R1713,R1714,R1715,R1718,R1719 |
| 329 | EBC64816401 | Resistor,Chip | 1 | R1543 |
| 330 | EBC64816701 | Resistor,Chip | 1 | L1571 |
| 331 | EBC64816801 | Resistor,Chip | 1 | R1219 |
| 332 | EBC64838201 | Resistor,Chip | 1 | R1315 |
| 333 | EBC64838401 | Resistor,Chip | 1 | R0926 |
| 334 | EBC64858101 | Resistor,Chip | 1 | R1111 |
| 335 | EBC64876601 | Resistor,Chip | 1 | R0917 |
| 336 | EBC64876901 | Resistor,Chip | 2 | R1314,R1331 |
| 337 | EBC65420001 | Resistor,Chip | 1 | R0329 |
| 338 | EBC65420101 | Resistor,Chip | 1 | L1567 |
| 339 | EBC65420201 | Resistor,Chip | 1 | R1536 |
| 340 | EBC65442101 | Resistor,Chip | 2 | R0905,R0913 |
| 341 | EBC65442601 | Resistor,Chip | 1 | R1114 |
| 342 | EBC65477601 | Resistor,Chip | 2 | R1249,R1250 |
| 343 | EBC65478001 | Resistor,Chip | 1 | L1573 |
| 344 | MBK66133401 | Can,Shield | 1 | SH6414 |
| 345 | MBK66212801 | Can,Shield | 1 | SH6416 |
| 346 | MBK66232601 | Can,Shield | 1 | SH6412 |
| 347 | MBK66232701 | Can,Shield | 1 | SH6411 |
| 348 | MBV64461601 | Clip | 4 | ANT1601,ANT1604,ANT1701,ANT1702 |
| 349 | RAA34548901 | Resin,PC | 1 | RAA100800 |
| 350 | EBR89433901 | PCB Assembly,Main,Insert | 1 | EBR071500 |
| 351 | MCQ70605601 | Damper | 1 | MCQ000000 |
| 352 | MBL68497201 | Cap | 1 | MBL000000 |
| 353 | MJN71574001 | Tape,Camera | 1 | MJN009400 |
| 354 | MJN71671001 | Tape,Camera | 1 | MJN009401 |
| 355 | MJN71650301 | Tape | 1 | MJN000000 |
| 356 | MJN71671101 | Tape,Camera | 1 | MJN009402 |
| 357 | MBK66212501 | Can,Shield | 1 | MBK070300 |
| 358 | MBK66212701 | Can,Shield | 1 | MBK070301 |
| 359 | MCQ70510001 | Damper | 1 | MCQ000001 |
| 360 | MCQ70551501 | Damper | 1 | MCQ000003 |


Copyright © 2019 LG Electronics. Inc. All right reserved.
Only training and service purposes

| No | Part No | Description | Qty | Location No. |
|---|---|---|---|---|
| 361 | MHK67409901 | Sheet | 1 | MHK000000 |
| 362 | MCQ70549101 | Damper | 1 | MCQ000002 |
| 363 | EBP63922901 | Camera Module | 1 | EBP000000 |
| 364 | EBP63981801 | Camera Module | 1 | EBP000001 |
| 365 | FAB34040201 | Screw,Machine | 17 | FAB010000 |
| 366 | MEZ66516305 | Label,Approval | 1 | MEZ002100 |
| 367 | MEZ67947101 | Label | 1 | MEZ000000 |
| 368 | SAD37926801 | Software,Mobile | 1 | SAD010000 |



Copyright © 2019 LG Electronics. Inc. All right reserved.
Only training and service purposes

LG